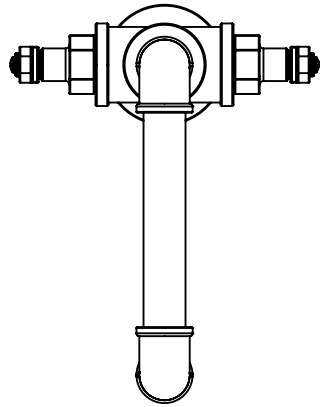

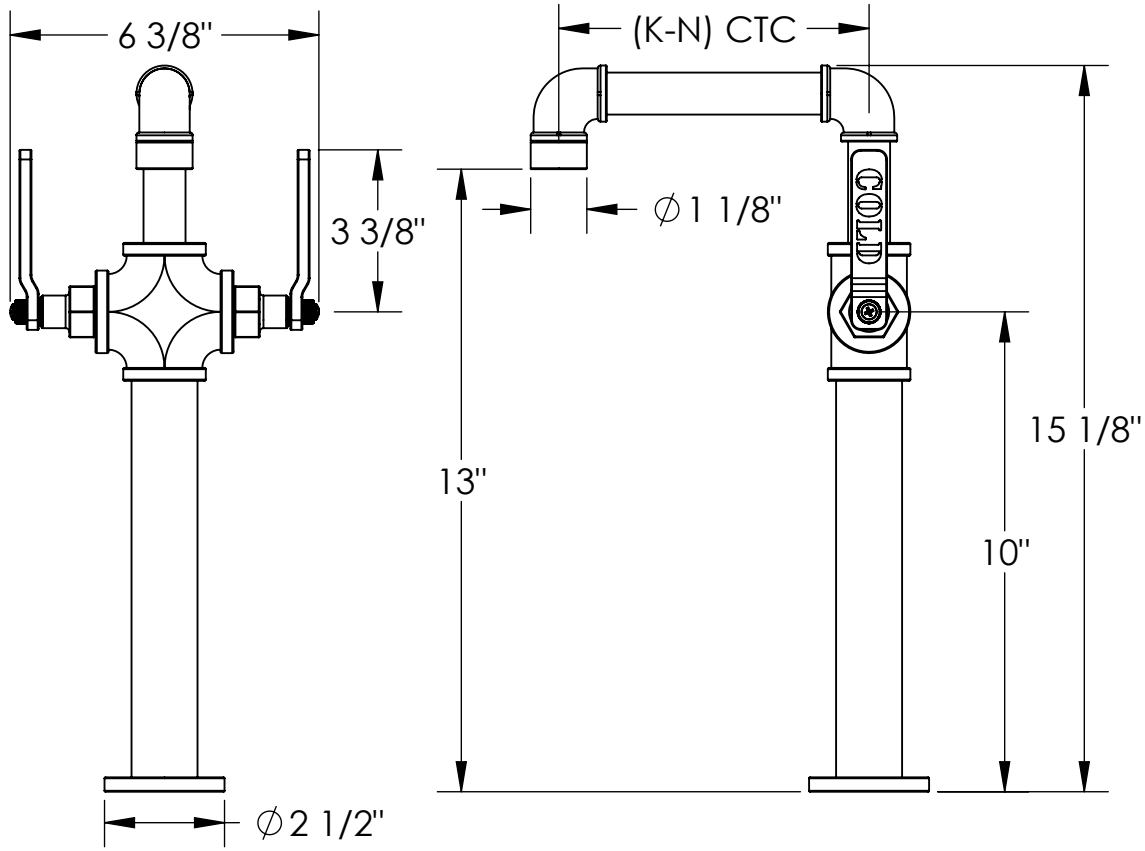

WATERMARK

38-1-EV4

Lavatory Widespread

Meets the applicable requirements of ASME A112.18.1-2005/CSA B125.1-05, entitled "Plumbing Supply Fittings" 2/25/2015 REV: 2 SCALE: 1:4

350 Dewitt Ave Brooklyn NY 11207 I t: 718-257-2800 I f: 718-257-2144 I e: info@watermark-designs.com I www.watermark-designs.com