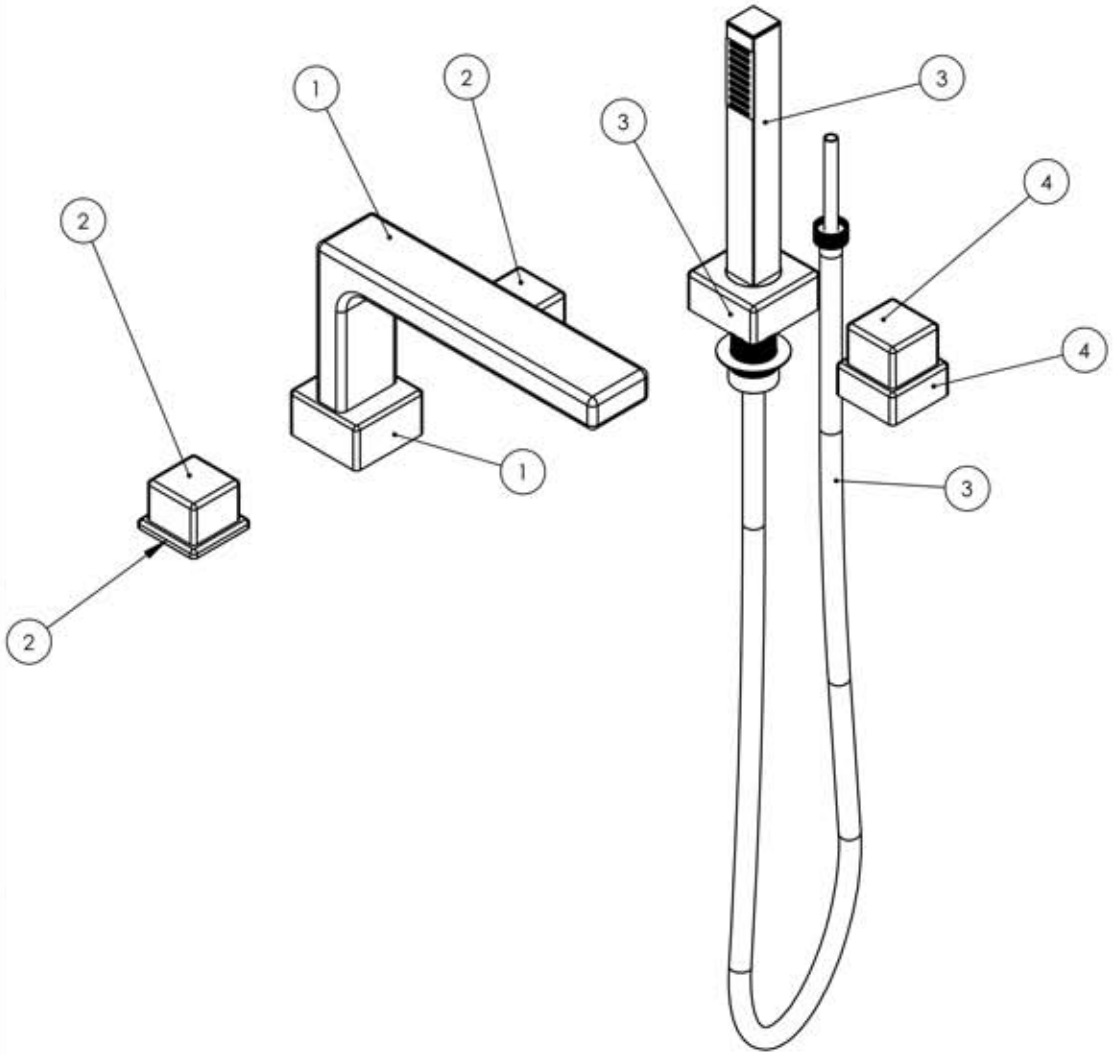

ITEM NO.	PART NUMBER	DESCRIPTION	QTY.
1	3-099	ASSEMBLIE, SPOUT ROMAN TUB, LOW, MIX SERIES	1
	10949/00	SPOUT, DECK TUB 290 MIX	1
	11221/00	ESCUTCHEON, SPOUT MIX SERIES	1
	92158	DOWEL PIN, 1/8" X 3/8"L	2
	11220	SPUD SCREW, 1/2"-NPSM CONNECTOR	1
	90034	O-RING, 2-1/8"ID X 2-1/4"OD X 1/16"THK, AS-568-034	1
	90020	O-RING, 7/8"ID X 1"OD X 1/16"THK, AS-568-020	1
	P05051	AERATOR, CACHE COINED SLOT M24X1.0 FULL FLOW	1
2	3-102/00	ASSY, HANDLE CUBE MIX	2
	10932/00	ESCUTCHEON, HANDLE MIX SERIES	1
	10926/00	HANDLE, SQUARE/CUBE MIX SERIES	1
	92176	WEAR WASHER	1
	92005	SET SCREW, CUP PT 6-32UNC THREAD 3/16"L	1
	92008	SET SCREW, CUP POINT 8-32	1
3	3-350/00	HANDSHOWER DECK TRIM, MIX	1
	P18002	ASSY, HANDSHOWER ROUGH MOUNT	1
	P18002_1	MOUNTING SLEEVE, ROUGH HANDSHOWER HOLDER	1
	P18002_2	WASHER, 2"OD X .045"THK.	1
	P18002_3	LOCK NUT, HANDSHOWER ROUGH	1
	P18002_4	BOTTOM SLEEVE HOSE GUIDE, HANDSHOWER	1
	P35316	BLACK PLASTIC INSERT, HANDSHOWER	1
	P35316	BLACK PLASTIC INSERT, HANDSHOWER	1
	3-374/00	HAND SHOWER MODERN	1
	P18039_2/00	HAND SHOWER BODY	1
	P15006	FLOW REGULATION CHECK VALVE	1
	P18038/00	HAND SHOWER CAP	1
	11216/00	ADAPTOR, HANDHELD MIX SERIES	1
	11215/00	HAND SHOWER BASE, MIX SERIES	1
	90025	O-RING, 1-3/16"ID X 1/16"THK, AS-568-025	1

PRELIMINARY PRINT
FOR DEVELOPMENT USE ONLY
DRAWING SUBJECT TO CHANGE WITHOUT NOTICE

ZONE	REV.	DESCRIPTION	DATE	APPROVED
		REVISIONS		

1261 LOGAN AVENUE
COSTA MESA, CALIFORNIA 92626
PHONE: 714.361.4800
FAX: 714.617.3120

PHYLRICH®
Defining Luxury Since 1959

PROPRIETARY AND CONFIDENTIAL
THE INFORMATION CONTAINED IN THIS DRAWING IS THE SOLE PROPERTY OF RSS MANUFACTURING. ANY REPRODUCTION IN PART OR AS A WHOLE WITHOUT THE WRITTEN PERMISSION OF RSS MANUFACTURING IS PROHIBITED.

-	-
-	-
-	-
NEXT ASSY	USED ON
APPLICATION	
MATERIAL	
FINISH	

DO NOT SCALE DRAWING

INTERPRET GEOMETRIC DIMENSIONING & TOLERANCING IN ACCORDANCE WITH ASME Y14.5-2009 & ASME Y14.41-2003 STANDARDS. UNLESS OTHERWISE SPECIFIED, DIMENSIONS ARE IN INCHES. TOLERANCES ARE:

FRACTIONS	DECIMALS	ANGULAR
±1/64"	X.X: ±.1 X.XX: ±.01 X.XXX: ±.005	±.5°

	NAME	DATE
DRAWN	NP	12/22/2015
CHECKED	MAF	

DECK HAND SHOWER KIT, CUBE HANDLE, MIX SERIES

SIZE	ASM/PRT NO.	REV
A	290-51/00	

SCALE: 1:4 | WEIGHT: lbs. | SHEET 1 OF 3

5 4 3 2 1