PHYLRICH®

164-56 WIDESPREAD FAUCET
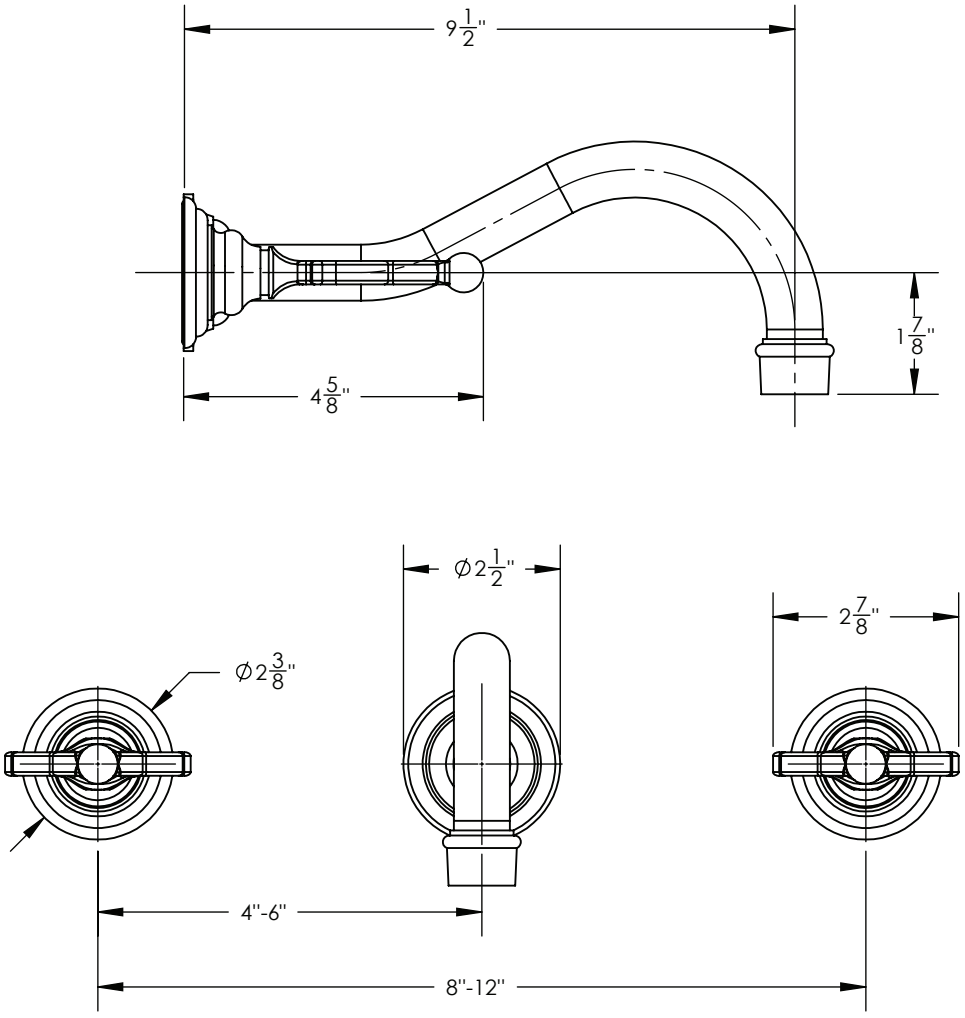
Product Specifications