S-CUBE TOWEL BAR / T.BARRA

sonia

1

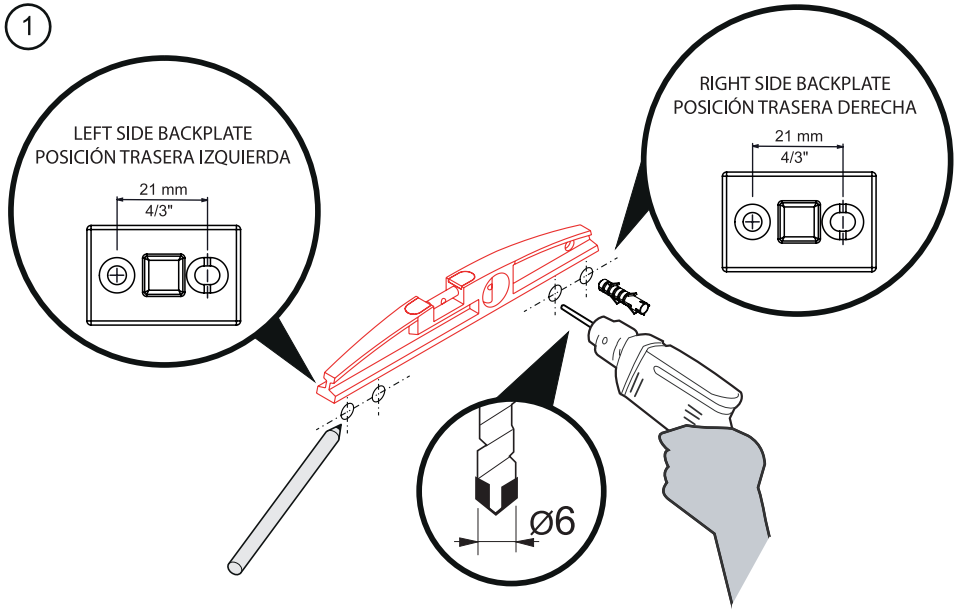

2

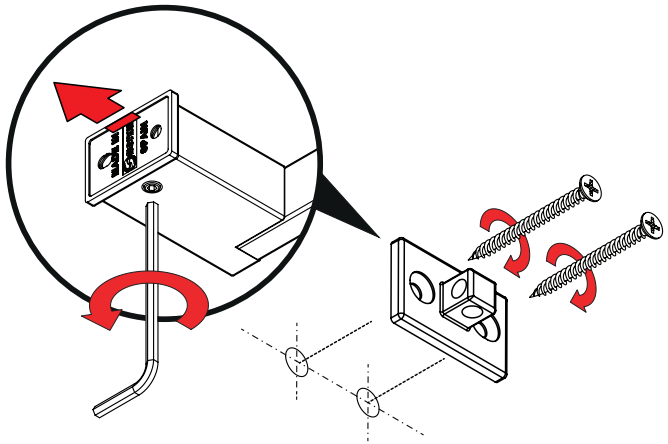

3

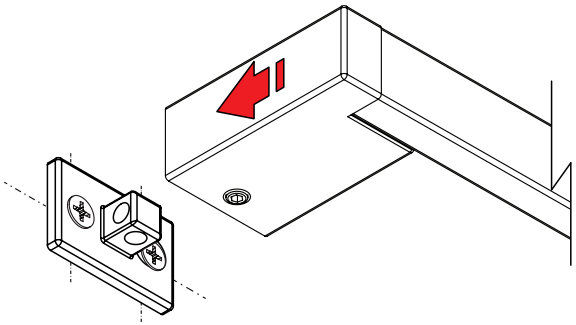

4

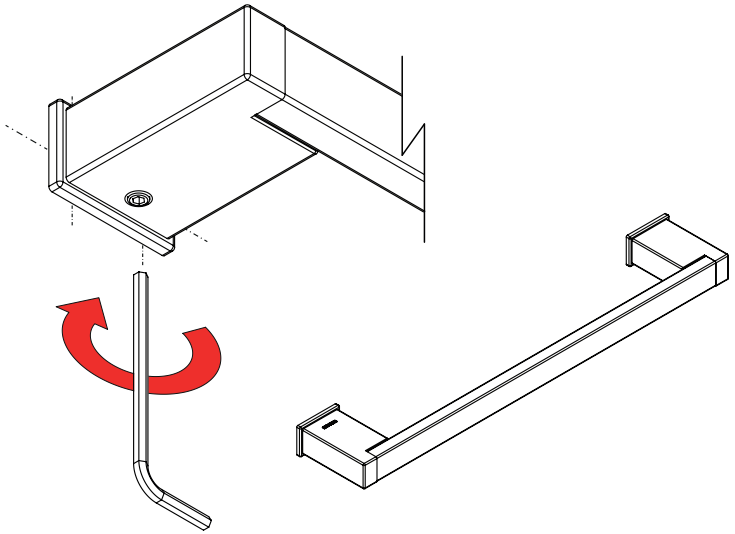

mont_260

130925