ROHL
Authentic Luxury for Kitchen and Bath®

www.rohlhome.com

# Strainer Baskets with Remote Pop-Up

ROHL Kitchen Accessories

## 739

### FEATURES

- Fits standard 3 1/ 2" US drains
- Standard 1 1/ 2" male connection to drain plumbing
- 28" cable
- Remote can be located on sink or counter
- Shorter mounting screws available for metal sink, Part #737SCREW23
- Longer cables 35 7/ 16" available, Part #737CABLE900
- Longer mounting screws available for thicker sinks, Part #737SCREW63
- Matches ROHL finishes

### COLORS/FINISHES

- Polished Chrome
- Polished Nickel
- Satin Nickel
- Tuscan Brass
- English Bronze
- Inca Brass
- White
- Black
- Biscuit

### WARRANTY

- Two Years on Manufacturer Defects*

* No warranty on Tuscan Brass Finish

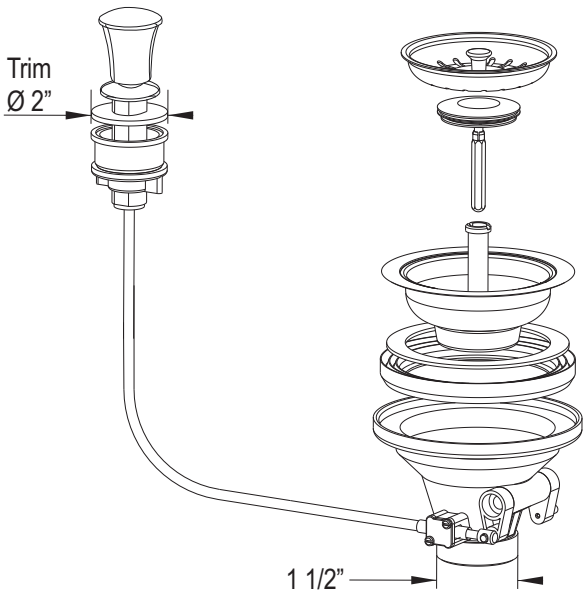


Consult your local ROHL showroom for additional information and specifications. For complete warranty details and a list of showrooms, go to www.rohlhome.com.