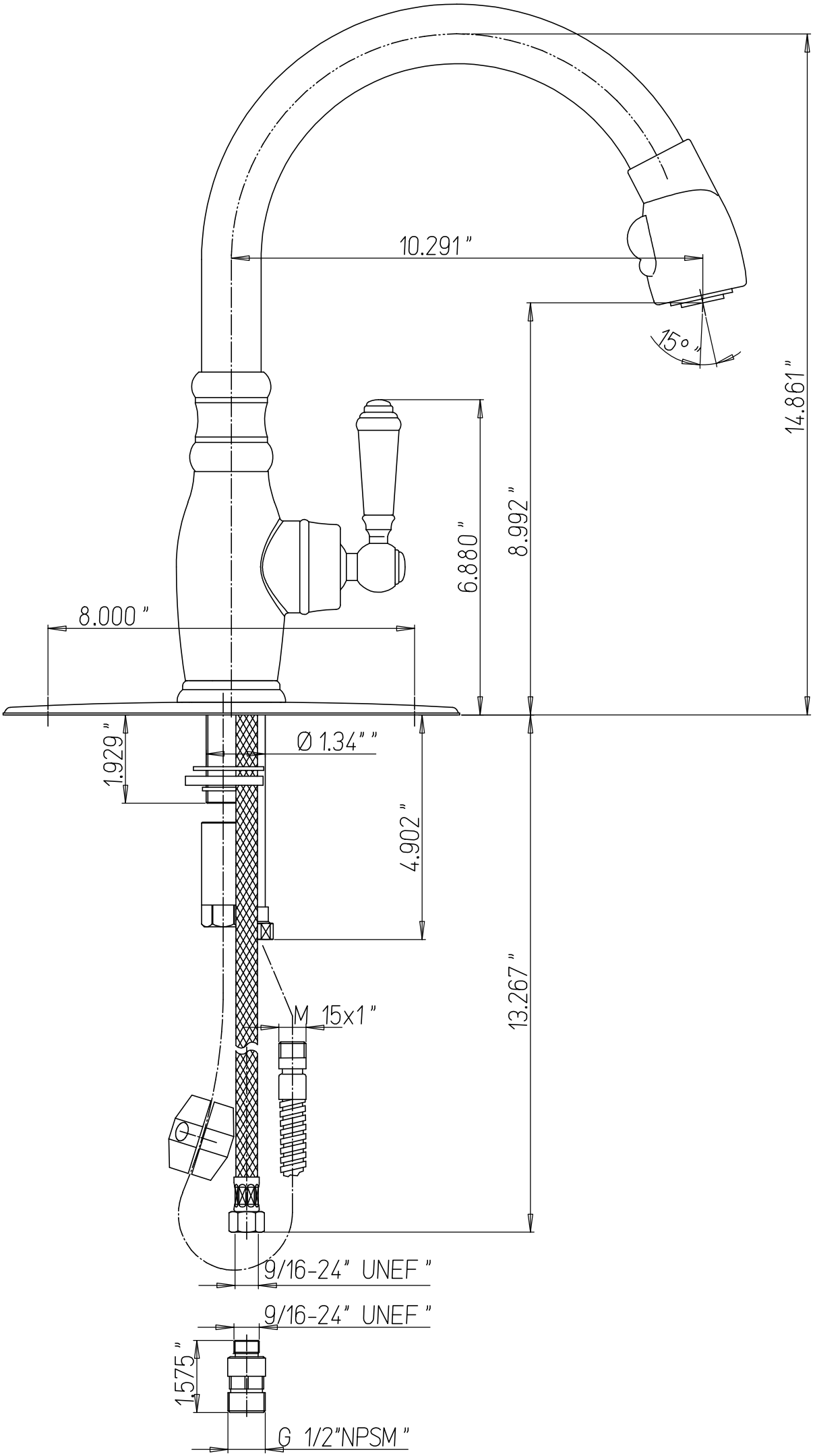
10.291"
15°
14.861"
8.992"
6.880"
8.000"
1.929"
Ø 1.34""
4.902"
13.267"
M 15x1"
9/16-24" UNEF"
9/16-24" UNEF"
1.575"
G 1/2"NPSM"