V24621-C

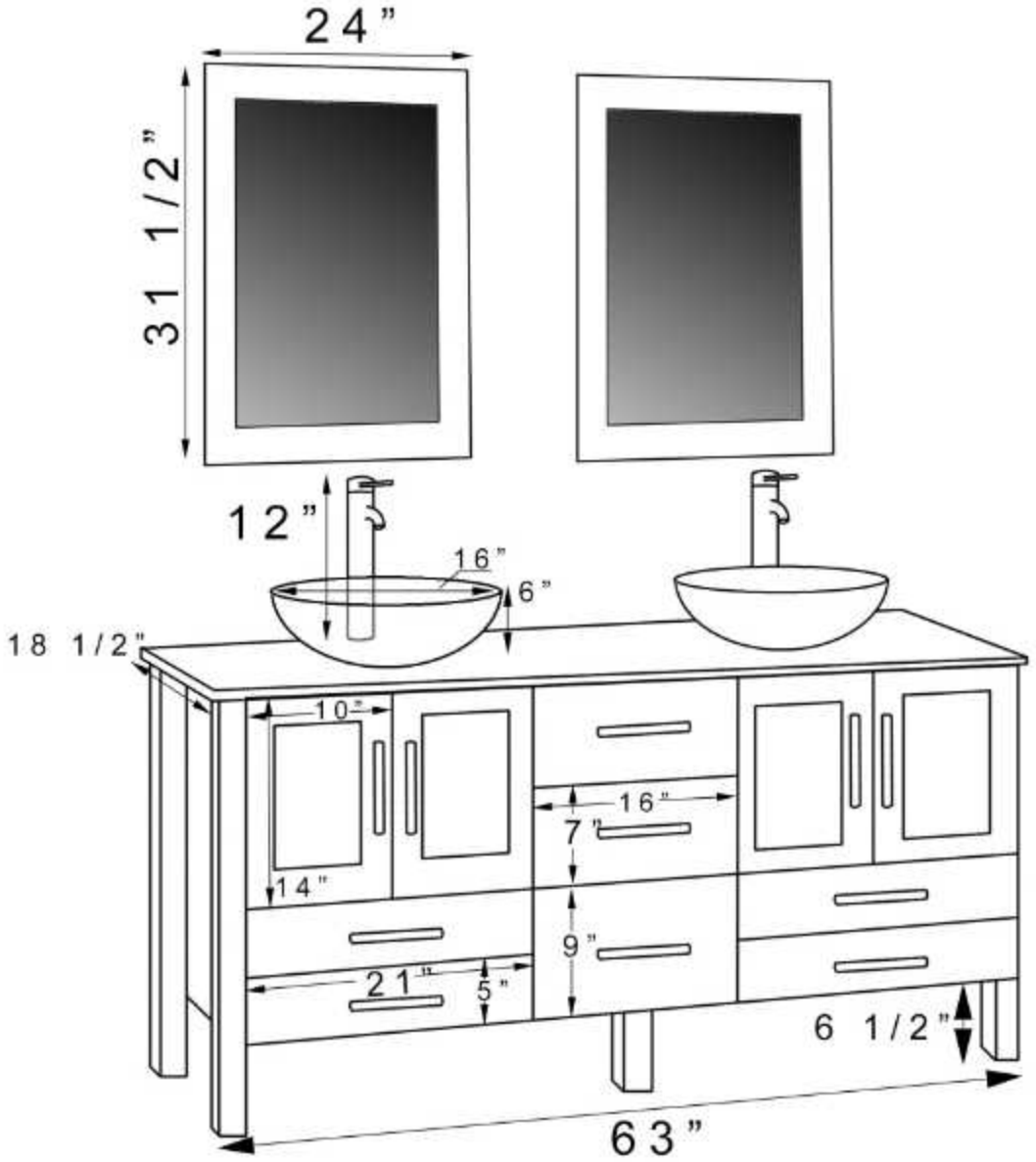
24"
31 1/2"
12"
16"
6"
18 1/2"
10"
16"
7"
14"
9"
21"
5"
6 1/2"
63"

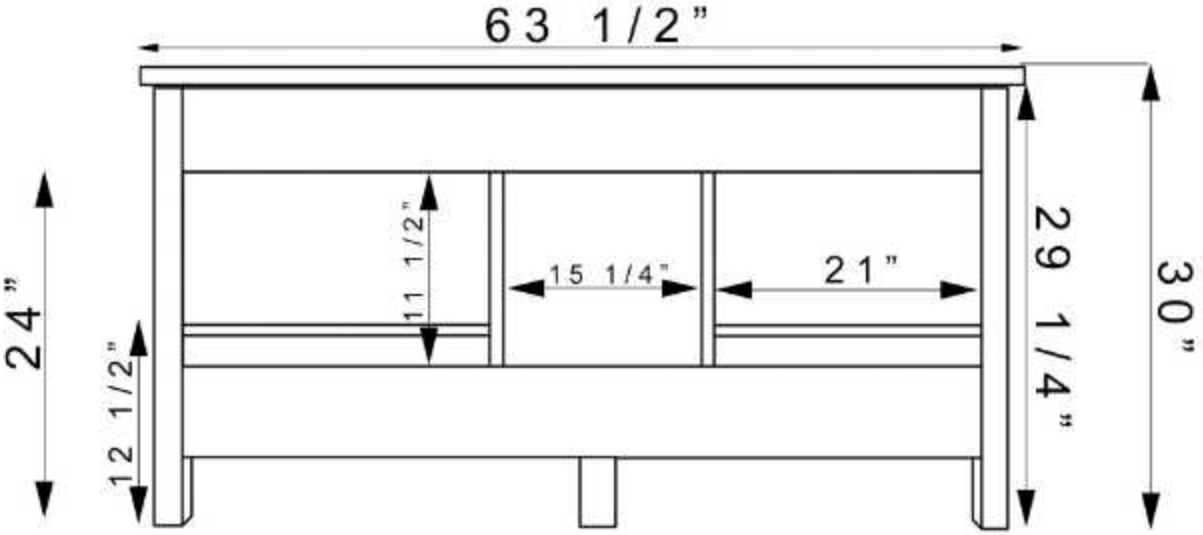
63 1/2"
24"
11 1/2"
15 1/4"
21"
29 1/4"
30"
12 1/2"