GRANDERA
Lavatory Centerset
M-Size

MODEL # 2331200A

Pure Freude an Wasser

GROHE

GROHE America, Inc | 200 North Gary Avenue, Suite G, Roselle, IL 60172
Phone: +1 (800) 444-7643 | Fax: +1 (800) 225-2778 | us-customerservice@grohe.com

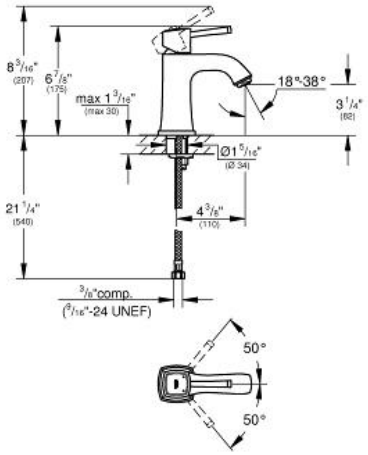

Product Description:
Lavatory Centerset
M-Size

Standard Specification:
- Single hole installation
- **GROHE SilkMove** 28 mm ceramic cartridge
- **GROHE StarLight** finish
- **GROHE EcoJoy** technology for less water and perfect flow
- **GROHE AquaGuide** adjustable mousseur 1.2 gpm
- Smooth body
- Stainless steel flex lines
- Temperature limiter
- **GROHE QuickFix** rapid installation system
- Max flow rate: 1.2 gpm (4.56 L/min)

Color:
❑ 2331200A 00A chrome

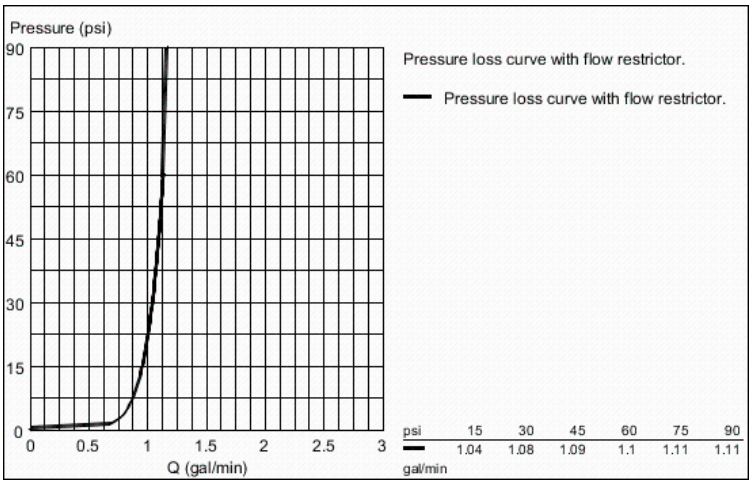

GRANDERA
Lavatory Centerset
M-Size

MODEL # 23312ENA

Pure Freude an Wasser

GROHE

GROHE America, Inc | 200 North Gary Avenue, Suite G, Roselle, IL 60172
Phone: +1 (800) 444-7643 | Fax: +1 (800) 225-2778 | us-customerservice@grohe.com

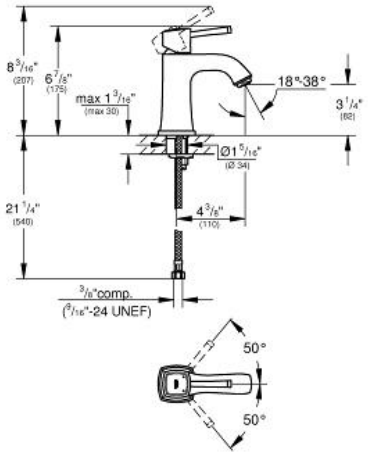

Product Description:
Lavatory Centerset
M-Size

Standard Specification:
- Single hole installation
- **GROHE SilkMove** 28 mm ceramic cartridge
- **GROHE StarLight** finish
- **GROHE EcoJoy** technology for less water and perfect flow
- **GROHE AquaGuide** adjustable mousseur 1.2 gpm
- Smooth body
- Stainless steel flex lines
- Temperature limiter
- **GROHE QuickFix** rapid installation system
- Max flow rate: 1.2 gpm (4.56 L/min)
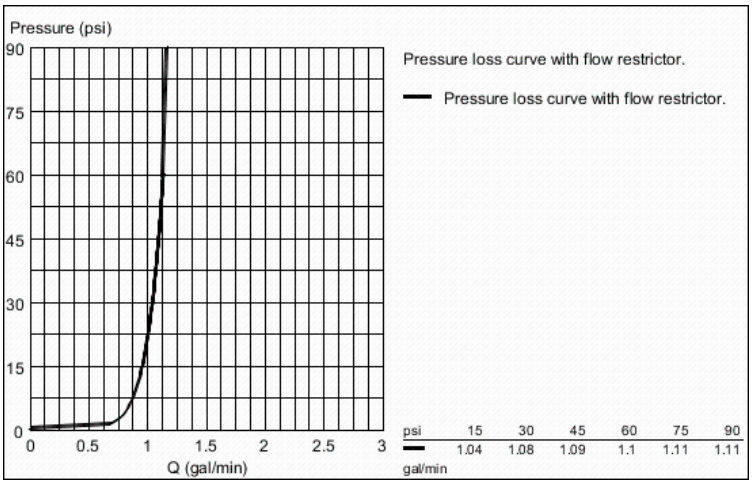
Color:
❑ 23312ENA ENA brushed nickel