RETRO-FIT 150
Shower System*
26124

Pure Freude an Wasser

GROHE America, Inc | 200 North Gary Avenue, Suite G, Roselle, IL 60172
Phone: +1 (800) 444-7643 | Fax: +1 (800) 225-2778 | us-customerservice@grohe.com

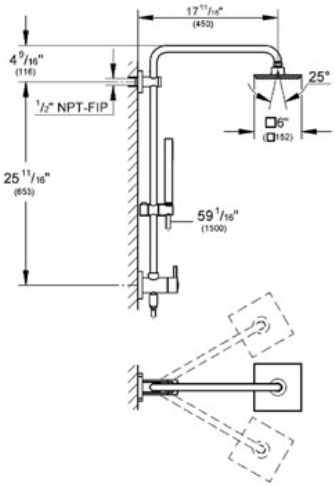

Shower System*

- **GROHE StarLight®** finish
- **GROHE EcoJoy®** technology for less water and perfect flow
- **GROHE DreamSpray®** perfect spray pattern
- **SpeedClean** anti-lime system
- **Inner WaterGuide** for a longer life

Consisting of:
- 17 3/4" horizontal swivel shower arm
- Built-in diverter allows change between:
- Cube head shower 1 spray (27 705 000)
- Rain
- With ball joint
- Rotation angle ± 15°
- Metal hand shower 1 spray (27 888 000)
- 1 Spray: Normal
- Adjustable in height with gliding element
- 59" metal shower hose (28 417 000)
- Angle adapter
- Max Flow Rate 2.5 gpm (9.5 L/min)
- Rotation cone for Twistfree-function
- **Suitable for instantaneous heaters from 18 kW/h**

Color:
❑ 26124 000 chrome