PLATINUM BY COOL LINES USA

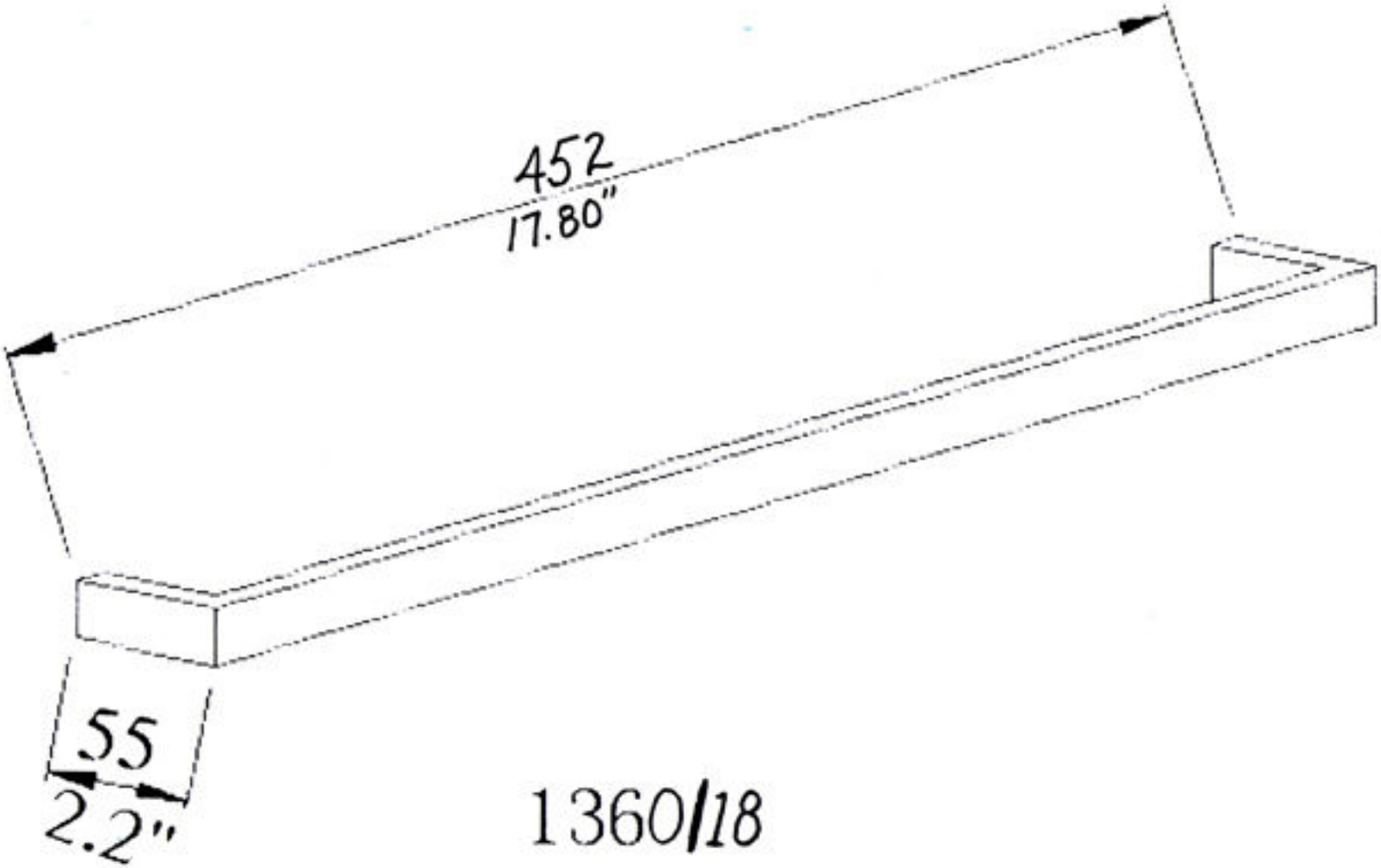

1360/18