CATALANO USA
THE ESSENCE OF CERAMICS

PREMIUM 70 WASHBASIN **170VP**

PREMIUM

FEATURES

- Single washbasin made of pressure-cast fireclay.
- Cata-glaze, lifetime treatment. A total bacteria-proof barrier.
- Install wall-hung, sit-on a countertop or on base cabinet.
- 0 up to 3 faucet holes. Must specify number of holes and hole position.

OPTIONS

- 5PA7N Front Towel Rail constructed of brass with chrome finish.

SIZE: W27.56" x D14.57" x H6.3"

SHIP WEIGHT: 39.11 lbs.

To Be Specified:
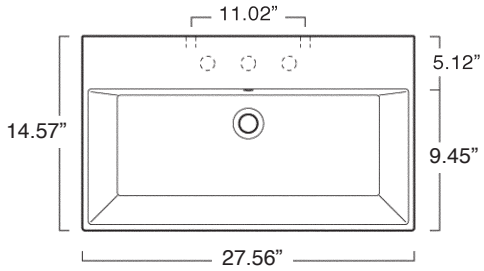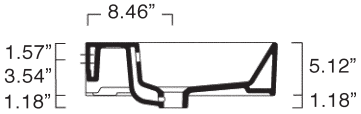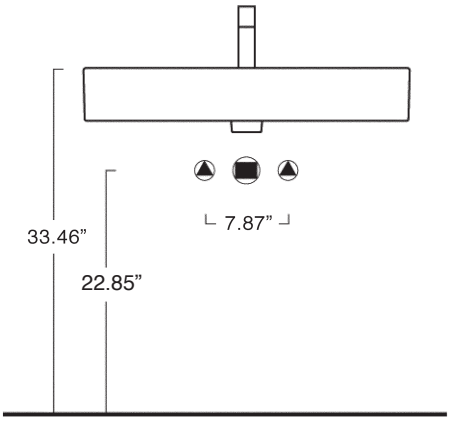
	Model No.	
❒	170VP00	White