CATALANO USA
THE ESSENCE OF CERAMICS

CANOVA ROYAL 57 WASHBASIN
1SOCV

FEATURES

- Single washbasin made of pressure-cast fireclay.
- Cata-glaze, lifetime treatment. A total bacteria-proof barrier.
- Install under counter. With overflow.
- No faucet holes.

SIZE: W22.44" x D16.54" x H7.87"

SHIP WEIGHT: 22.05 lbs.

To Be Specified:

	Model No.	Color
❒	1SOCV00	White

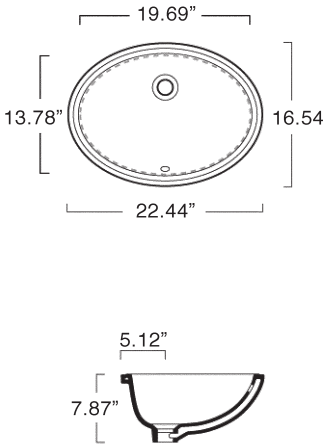

CANOVA ROYAL