WATERMARK

MADE IN BROOKLYN, NEW YORK

INSTALLATION INSTRUCTION

Exposed Shower System 28-6.1, 31-6.1

ASME A1 12.18.1
NSF61
CAS B125.1

DIMENSIONS (Shown below is 28-6.1)

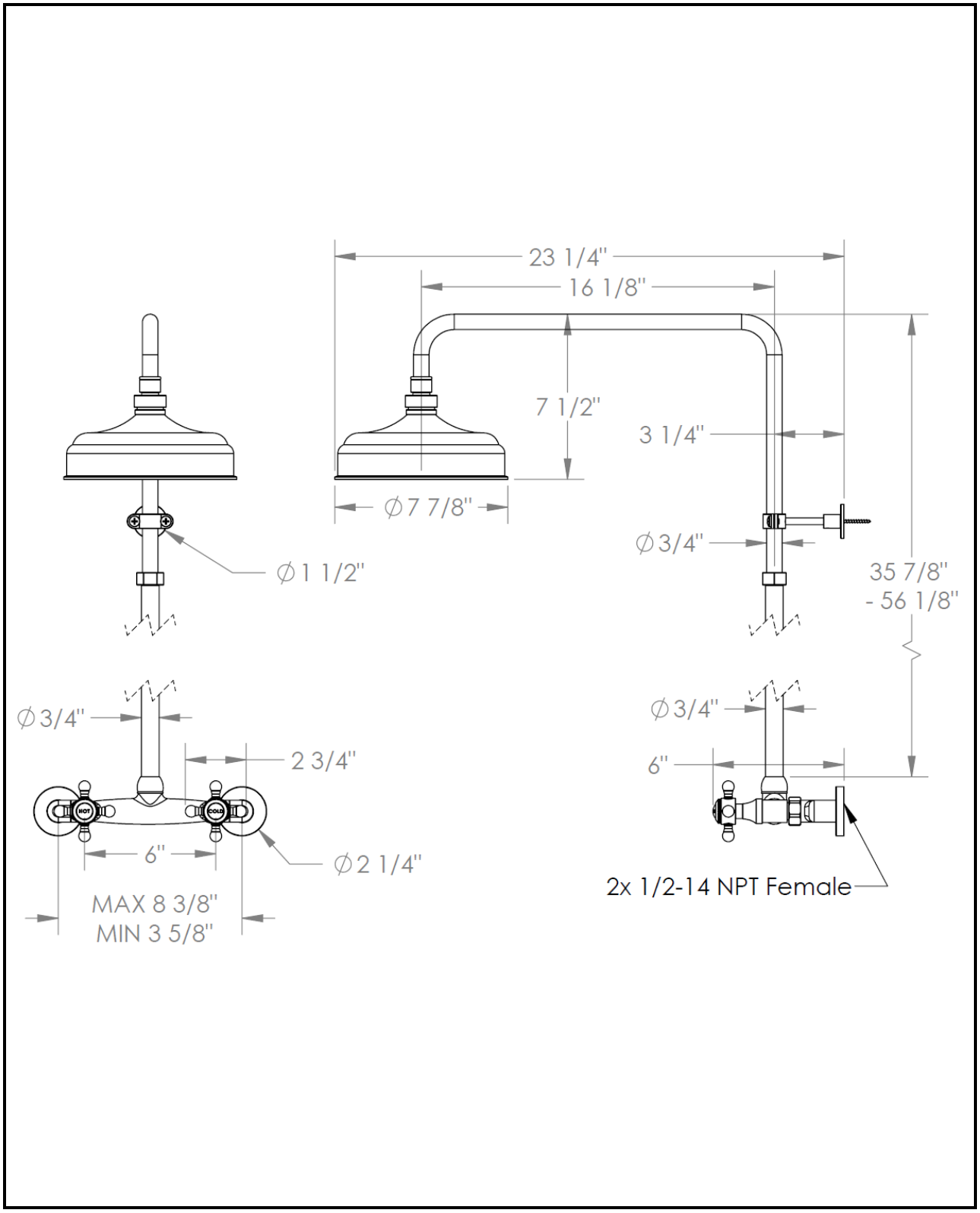

PARTS BREAKDOWN

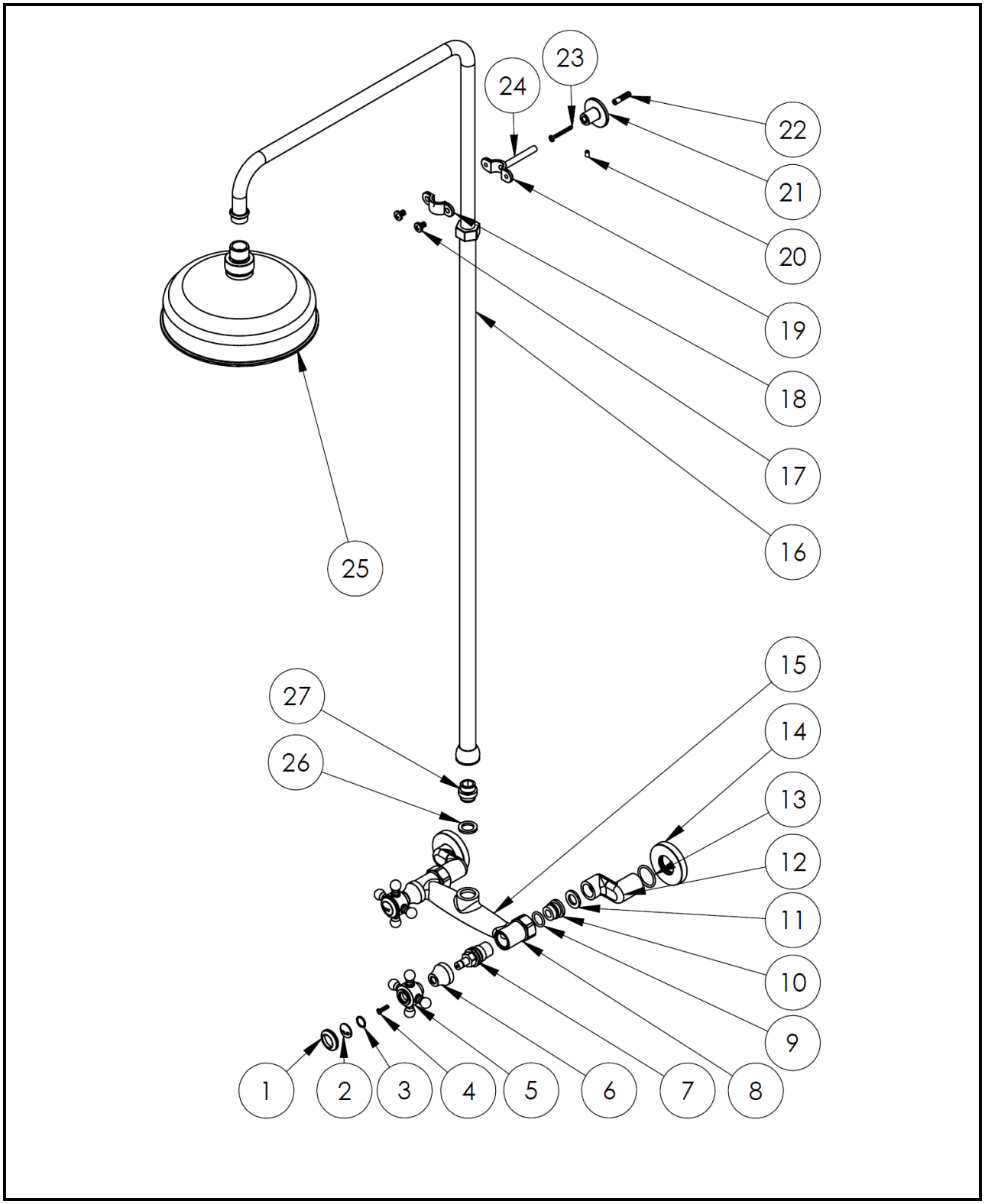

PARTS BREAKDOWN (CON'D)

ITEM NO.	PART NUMBER	QTY.
1	X-CAP-RING	2
2	X-PRCLN-INSRT-COLD	1
3	O-RING AS568 - 014	2
4	CR-FHM1 #8-32x0.625x0.625	2
5	X-POST	2
6	24-7.7-CRT-ESC	2
7	CARTRIDGE	2
8	24-7.7-NUT	2
9	O-RING AS568 - 114	2
10	24-7.7-NUT-ADAP	2
11	24-7.7-GSKT	2
12	24-7.7-LEG	2
13	O-RING AS568 - 120	2
14	SS-LFT70AF-FLANGE	2
15	24-7.7-BODY	1
16	EX9500-RISER	1
17	1/4-20x0.375x0.375-S	2
18	EX9500-RSR-SEAT-FRNT-BRCKT	1
19	EX9500-RSR-SEAT-BACK-BRCKT	1
20	M5 x 0.8 x 8 Hex Socket Type I Cup End Set Screw	1
21	EX9500-RSR-SEAT-BASE	2
22	AF6 WALL ANCHOR	1
23	#8- 1.5-IN-DRYWALL-SCRW	1
24	EX9500-RSR-SEAT-STEM	1
25	SH-RH075	1
26	24-7.7-GSKT-TOP	1
27	28-6.1-RSR-NUT-INSRT	1

INSTALLATION INSTRUCTIONS

ATTENTION

1. The cartridges in the main body have been tested and adjusted by the factory. DO NOT take the cartridges apart.
2. Ensure to clean water supply pipe before installation to avoid clogging.

TO KEEP THE QUALITY OF THE FAUCET PLEASE FOLLOW THESE INSTRUCTIONS

- Avoid contact with newly applied paint, thinner or other harsh solvents.
- To clean, wipe your faucet with a soft cloth dampened with mild soapy water or a citrus based furniture polish. For chrome and nickel finishes, a chrome cleaner can also be used every few weeks.
- Do not use any harsh chemical cleaners or any product with ammonia.
- Avoid contact with cosmetic products, such as shaving cream, nail polish removers, or colognes.
- It is important that you keep your hardware dry. Elements in water remaining on the faucet can break down the finish. Pay special attention to area where water can settle such as the mouth of the spout and around the base of the handles.

STEP (1)

Choose desired position to install the mixer body, note the center to center distance of the flanges should fall in the range between 3 5/8” and 8 3/8”

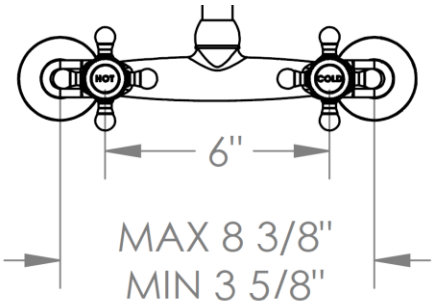

Place O-Ring (13) in the flange (14) and then insert leg (12) in to the flange. Connect leg (12) to water supply pipe with pipe sealant. Tighten legs to desired mixer body installation position.

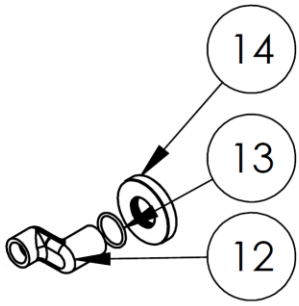

STEP (2)

Install packing gaskets (11) into hot and cold inlets in rear of mixer body (8). With a wrench, tighten the packing nut onto leg (12) and verify stability of mixer body.

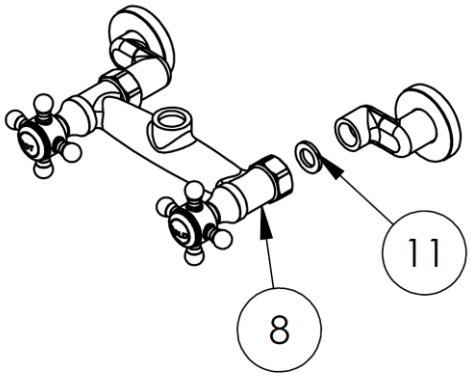

STEP (3)

Choose desired height of shower head/ rain head, and then align riser (16) with mixer body (8) to mark the location to install the riser seat base (21).

With location of riser seat base (21) determined above, drill one hole in the wall for wall anchor (22). Hammer wall anchor (22) in place. Install riser seat base (21) to wall using screw (23)

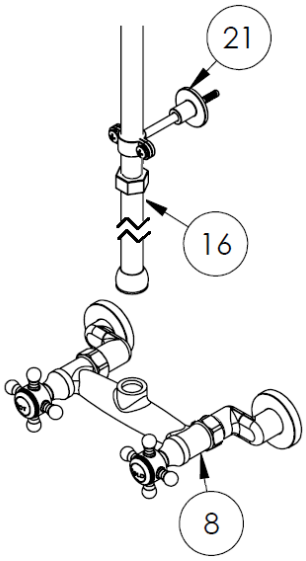

STEP (4)

Based on the diagram below, assemble the rest of riser seat components (17), (18), (19), (20), (24) with the riser (16). DO NOT tighten screws (17) as yet.

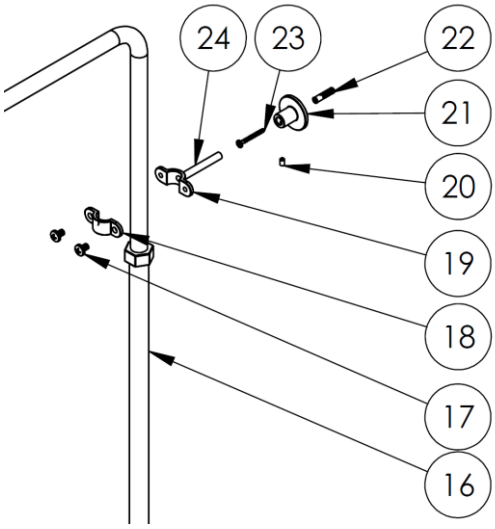

STEP (5)
Insert (27) into the riser and tighten.

Tighten riser to mixer body (8) with the nut at the end with gasket (26). Go back to STEP (4) and tighten screws (17) to secure the riser position. Verify stability of mixer and riser.

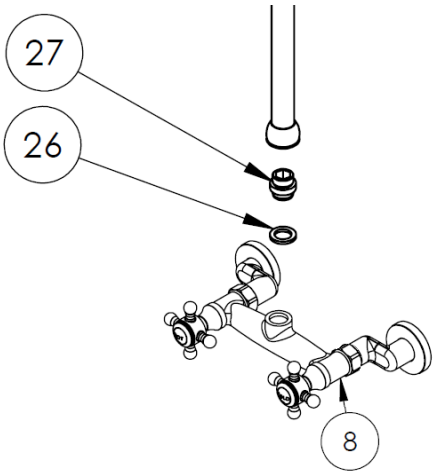

STEP (6)
Install shower head/ rain head into the shower arm using a crescent wrench or fitting wrench. Verify stability of the entire system.

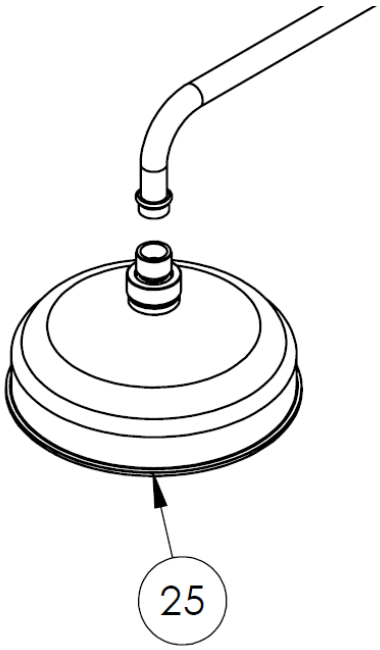

STEP (7)
Check for leakage and stability issues before use.

IMPORTANT INSTALLATION INFORMATION

- USE TEFLON TAPE OR PIPE SEALANT FOR THREADED CONNECTIONS
- DO NOT USE PLUMBER'S PUTTY ON ANY OF THE BRASS COMPONENTS
  This will cause the finish to tarnish and void the warranty. A non-corrosive Alkoxy Silicone is recommended.
- DURING SWEATING OF LINES DO NOT OVERHEAT CASTING
  Overheating may cause damage to internal mechanism
- COPPER ADAPTORS MAY BE REQUIRED TO COMPLETE YOUR INSTALLATION

For technical support, please call 718-257-2800