Phylrich

SPECIFICATIONS

Wall Tub Set
Model K1104_003

FEATURES

- Style: English Nostalgia
- Collection: Amphora
- Temperature controlled by handles

Image shown may not be in the finish selected

COLOR FINISHES

- Polished Nickel (K1104_014)
- Satin Nickel (K1104_015)
- Pewter (K1104_15A)
- Polished Chrome (K1104_026)
- Polished Brass (K1104_003)
- Polished Brass Antiqued (K1104_007)
- Satin Brass (K1104_004)
- Polished Gold (K1104_025)
- Polished Gold Antiqued (K1104_25D)
- Satin Gold (K1104_024)
- Satin Gold Antiqued (K1104_24D)
- Satin Jeweler's Gold (K1104_24J)
- Old English Brass (K1104_OEB)
- Antique Brass (K1104_047)
- Antique Bronze (K1104_11B)

WARRANTY

- Limited Lifetime

COMPLIES WITH

- ADA
- A112.18.1-05/CSA B125.1-2005-CERTIFIED
- cUPC-CERTIFIED
- UPC-CERTIFIED

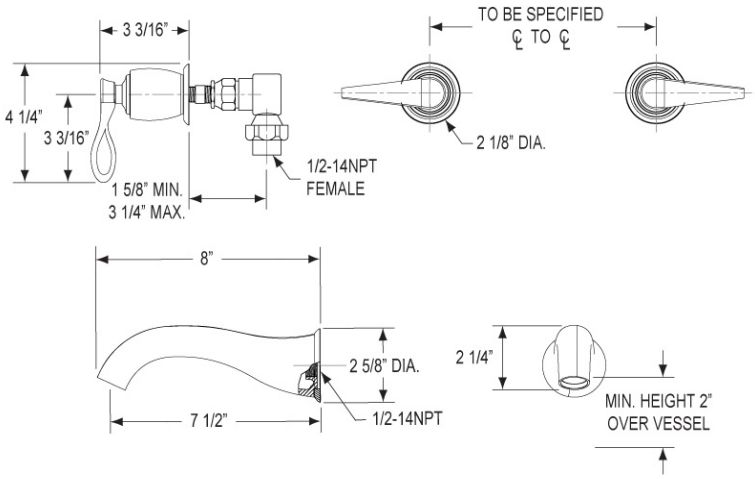

©2012 Phylrich