Phylrich

SPECIFICATIONS

Kitchen Faucet with Sidespray
Model DK205S_15A

FEATURES

- Style: English Nostalgia
- Collection: 3Ring
- 2.2 gpm @ 60 psi
- Spout Reach: 8.9375"
- 1-1/2" (38mm) hole size for Kitchen Faucet

COLOR FINISHES

- Polished Nickel (DK205S_014)
- Satin Nickel (DK205S_015)
- Pewter (DK205S_15A)
- Polished Chrome (DK205S_026)
- Polished Brass (DK205S_003)
- Old English Brass (DK205S_OEB)
- Antique Brass (DK205S_047)
- Antique Bronze (DK205S_11B)

WARRANTY

- Limited Lifetime

Image shown may not be in the finish selected

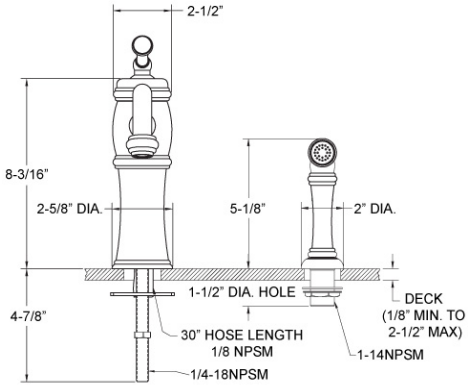

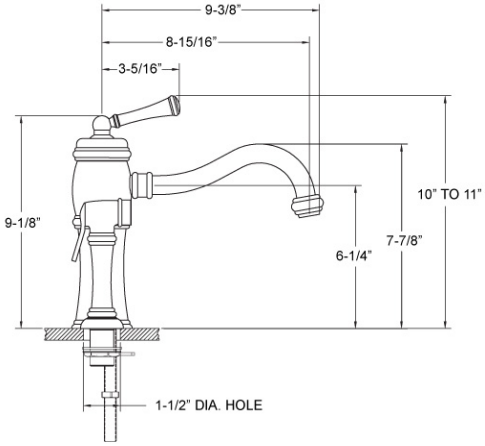

©2012 Phylrich