Ribbon Lever Grab Bar Fork Handshower Holder

Model #: SL67-

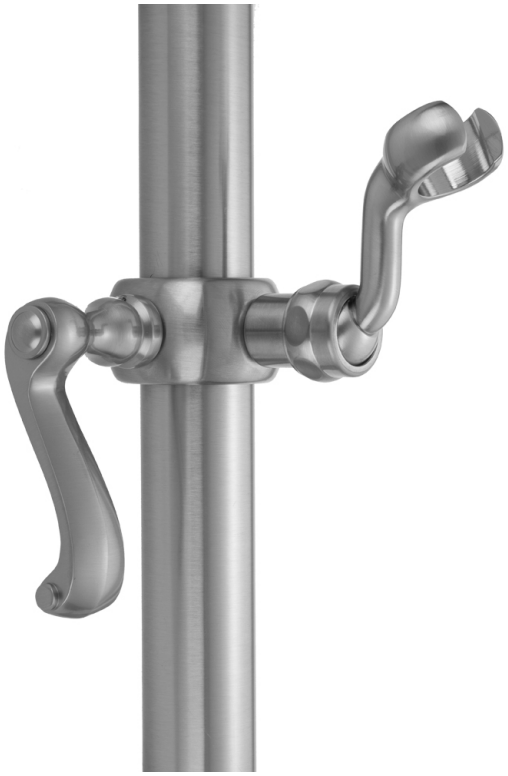

FEATURES:

- Sliding handshower mount for all luxury grab bars
- All brass construction, fully polished & plated
- Adjustable tilt of handshower bracket allows for use of handshower at desired angle
- ADA compliant lever handle
- Grab Bar Sold Separately

AVAILABLE FINISHES:

Polished Chrome (PCH)	Satin Chrome (SC)	Bronze Umber (BU)
Satin Nickel (SN)	Pewter (PEW)	Caramel Bronze (CB)
Polished Nickel (PN)	Antique Brass (AB)	Antique Copper (ACU)
Oil-Rubbed Bronze (ORB)	Polished Brass (PB)	Polished Copper (PCU)
Vintage Bronze (VB)	Satin Brass (SB)	Rose Gold (RG)
Matte Black (MBK)	Satin Gold (SG)	Polished Gold (PG)
Black Nickel (BKN)	Bombay Gold (BG)	Jewelers Gold (JG)
Europa Bronze (EB)	White (WH)	Sedona Beige (SDB)
Tristan Brass (TB)	Unlacquered Brass (ULB)	

SPECIFICATION DRAWING:
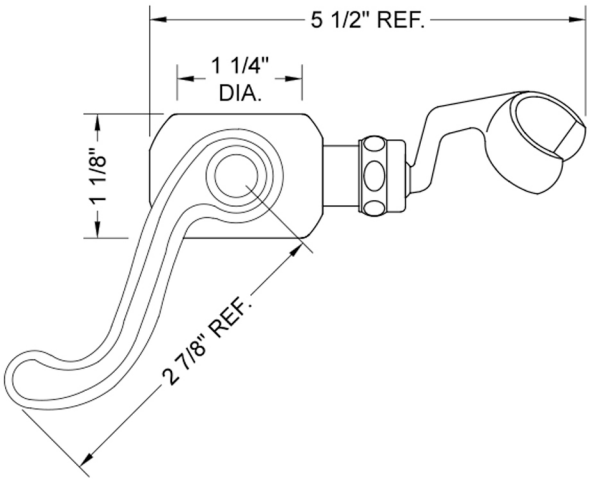
FRONT VIEW