G20 24" x 24" Inside Corner Grab Bar

Model #: G20-24-24-IC-

JACLO
Confidence from start to finish.™

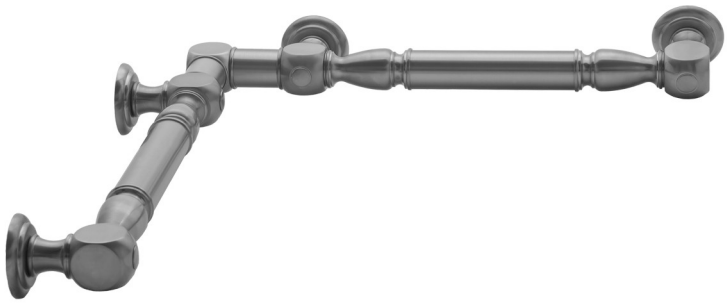

FEATURES:

- ADA compliant when properly installed
- All brass construction, fully polished & plated
- All grab bars can be custom sized. Contact JACLO for pricing & availability
- Optional handshower sliders and toilet paper/wash cloth holders can be added only upon initial order
- Grab bars over 32" REQUIRE a middle post

AVAILABLE FINISHES:

Polished Chrome (PCH)	Satin Chrome (SC)	Bronze Umber (BU)
Satin Nickel (SN)	Pewter (PEW)	Caramel Bronze (CB)
Polished Nickel (PN)	Antique Brass (AB)	Antique Copper (ACU)
Oil-Rubbed Bronze (ORB)	Polished Brass (PB)	Polished Copper (PCU)
Vintage Bronze (VB)	Satin Brass (SB)	Matte Black (MBK)
Satin Gold (SG)	Polished Gold (PG)	Black Nickel (BKN)
White (WH)	Unlacquered Brass (ULB)	Satin Cooper (SCU)
Almond (ALD)	Amber (AMB)	Azure Blue (AZB)
Coral (COR)	Mint Green (GRN)	Stone Grey (GRY)
Lilac (LAC)	Light Blue (LBL)	Limon (LIM)
Plum (PLM)	Pink (PNK)	Red (RED)
Graphite (GPH)	Aged Unlacquered Brass (AUB)	

SPECIFICATION DRAWING:

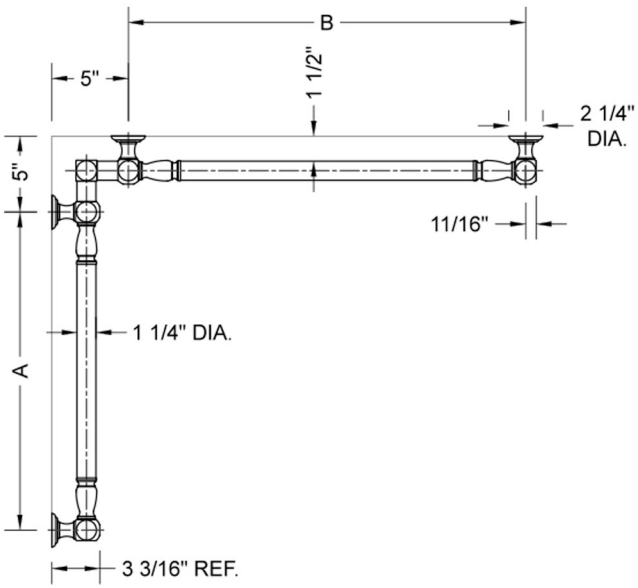

BRASS LUXURY GRAB BAR

PART. #	DESCRIPTION	A	B
G20-12-12-IC	CENTER OF POST	12"	12"
G20-12-16-IC	CENTER OF POST	12"	16"
G20-12-24-IC	CENTER OF POST	12"	24"
G20-12-32-IC	CENTER OF POST	12"	32"
G20-12-36-IC	CENTER OF POST	12"	36"
G20-12-48-IC	CENTER OF POST	12"	48"
G20-12-60-IC	CENTER OF POST	12"	60"
G20-16-16-IC	CENTER OF POST	16"	16"
G20-16-24-IC	CENTER OF POST	16"	24"
G20-16-32-IC	CENTER OF POST	16"	32"
G20-16-36-IC	CENTER OF POST	16"	36"
G20-16-48-IC	CENTER OF POST	16"	48"
G20-16-60-IC	CENTER OF POST	16"	60"
G20-24-24-IC	CENTER OF POST	24"	24"
G20-24-32-IC	CENTER OF POST	24"	32"

PART. #	DESCRIPTION	A	B
G20-24-36-IC	CENTER OF POST	24"	36"
G20-24-48-IC	CENTER OF POST	24"	48"
G20-24-60-IC	CENTER OF POST	24"	60"
G20-32-32-IC	CENTER OF POST	32"	32"
G20-32-36-IC	CENTER OF POST	32"	36"
G20-32-48-IC	CENTER OF POST	32"	48"
G20-32-60-IC	CENTER OF POST	32"	60"
G20-36-36-IC	CENTER OF POST	36"	36"
G20-36-48-IC	CENTER OF POST	36"	48"
G20-36-60-IC	CENTER OF POST	36"	60"
G20-48-48-IC	CENTER OF POST	48"	48"
G20-48-60-IC	CENTER OF POST	48"	60"
G20-60-60-IC	CENTER OF POST	60"	60"