T33 Reeded 32H x 24W T Grab Bar

Model #: T33-32H-24W-

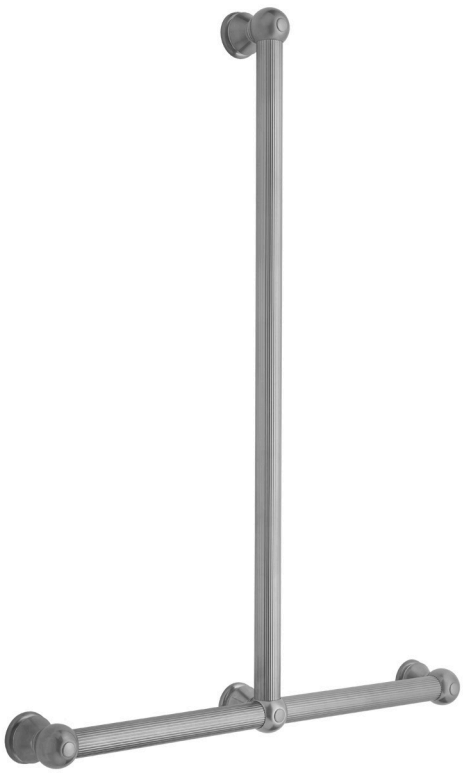

FEATURES:

- ADA compliant when properly installed
- All brass construction, fully polished & plated
- All grab bars can be custom sized. Contact JACLO for pricing & availability
- Optional handshower sliders and toilet paper/wash cloth holders can be added only upon initial order
- Grab bars over 32" REQUIRE a middle post

AVAILABLE FINISHES:

Polished Chrome (PCH)	Satin Chrome (SC)	Bronze Umber (BU)
Satin Nickel (SN)	Pewter (PEW)	Caramel Bronze (CB)
Polished Nickel (PN)	Antique Brass (AB)	Antique Copper (ACU)
Oil-Rubbed Bronze (ORB)	Polished Brass (PB)	Polished Copper (PCU)
Vintage Bronze (VB)	Satin Brass (SB)	Matte Black (MBK)
Satin Gold (SG)	Polished Gold (PG)	Black Nickel (BKN)
White (WH)	Unlacquered Brass (ULB)	Satin Cooper (SCU)
Almond (ALD)	Amber (AMB)	Azure Blue (AZB)
Coral (COR)	Mint Green (GRN)	Stone Grey (GRY)
Lilac (LAC)	Light Blue (LBL)	Limon (LIM)
Plum (PLM)	Pink (PNK)	Red (RED)
Graphite (GPH)	Aged Unlacquered Brass (AUB)	

SPECIFICATION DRAWING:

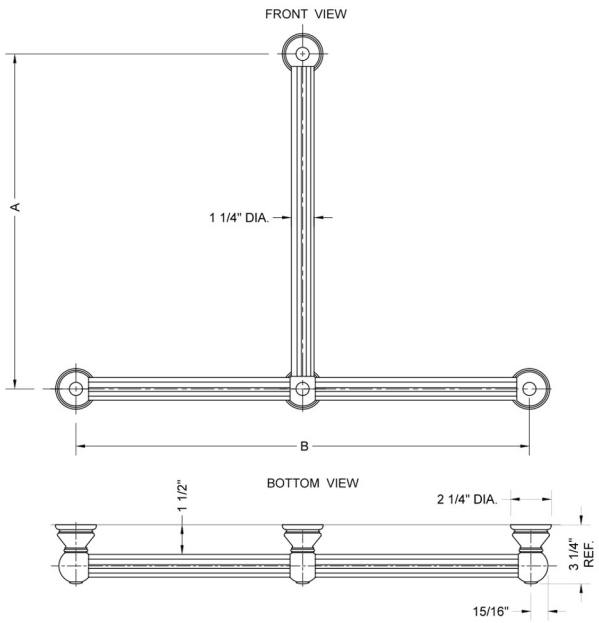

BRASS LUXURY GRAB BAR			
PART. #	DESCRIPTION	A H	B W
T33-24H-24W	CENTER TO CENTER	24"	24"
T33-24H-32W	CENTER TO CENTER	24"	32"
T33-32H-24W	CENTER TO CENTER	32"	24"
T33-32H-32W	CENTER TO CENTER	32"	32"