GROHE

WATER TECHNOLOGY

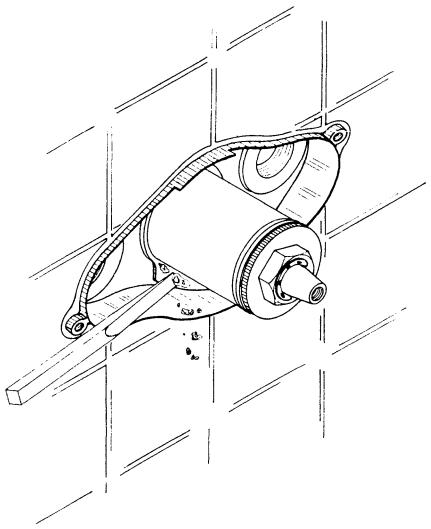

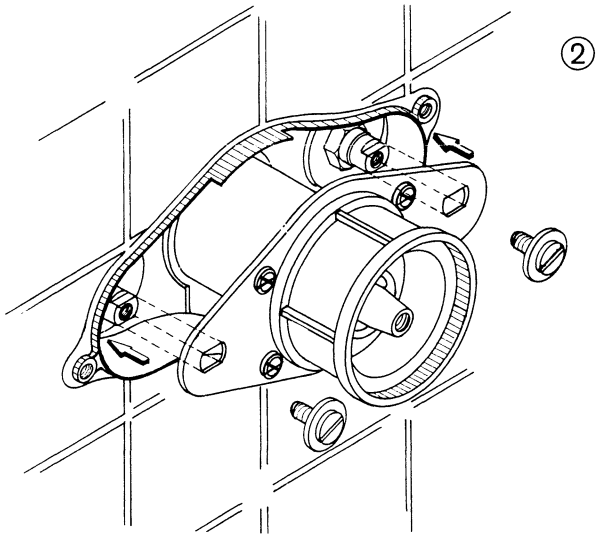

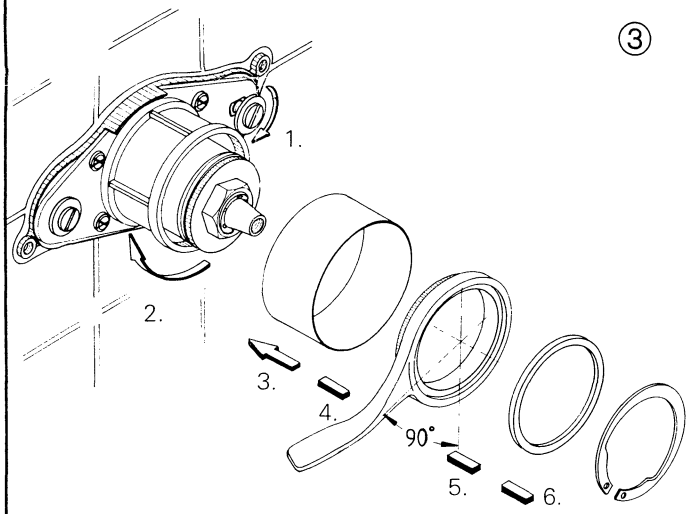

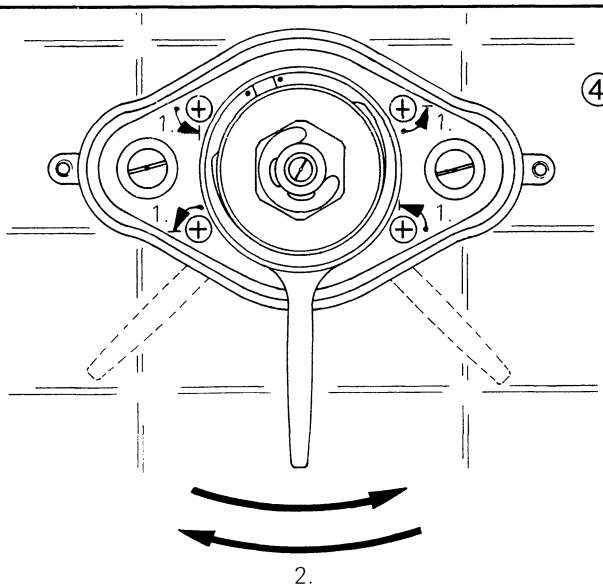

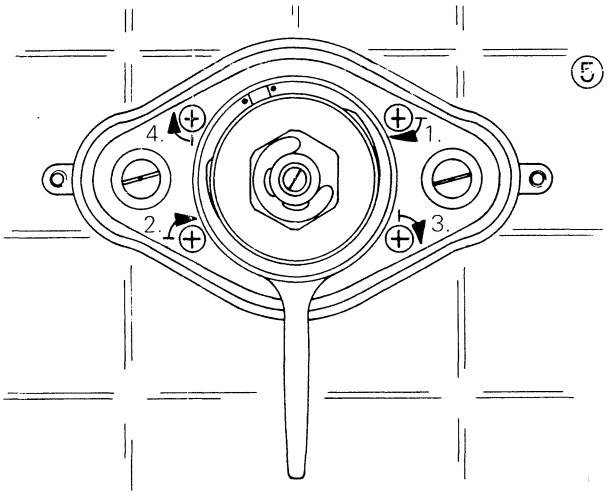

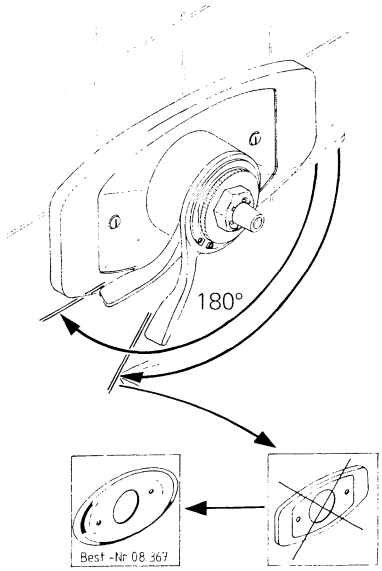

97.737.031/ÄM 4725/12.86