Kraus®

MODEL-KBU-22

Product Description and Measurements

Kitchen stainless steel sink

- ★ **Kraus Collection**
- ★ **16 Gauge Stainless Steel**
- ★ **Overall Size: 32 1/4" X 18 1/2" X 9"**
- ★ **Double bowl under mount kitchen sink**

In Accordance with Industry Codes & Standards for USA & Canada
All Kraus Stainless Steel Kitchen Sinks are Certified & Listed By cUPC.

Thank You

Dear Valued Customer,
Kraus would like to take this opportunity to thank you for this purchase. It is our sincere hope that you are completely satisfied with your new product. We welcome any questions or comments that you may have and look forward to assisting you with your accessory needs in the future.

Sincerely,
Kraus customer service department.

Prior To Installation Steps

1. Unpack your new product and ensure that all the parts are contained in the packaging.
2. Keep the product in its original box until you ready to install it.
3. The counter top must be flat.
4. Shut off the water supply if replacing a previously-installed vessel sink.
5. Observe all plumbing and building codes in your area.
6. It is recommended that installation of the product be done by a professional plumber.

 Copyright ©2008 - 2009, Kraus USA Inc.

Kraus®

Rough-In Dimensions

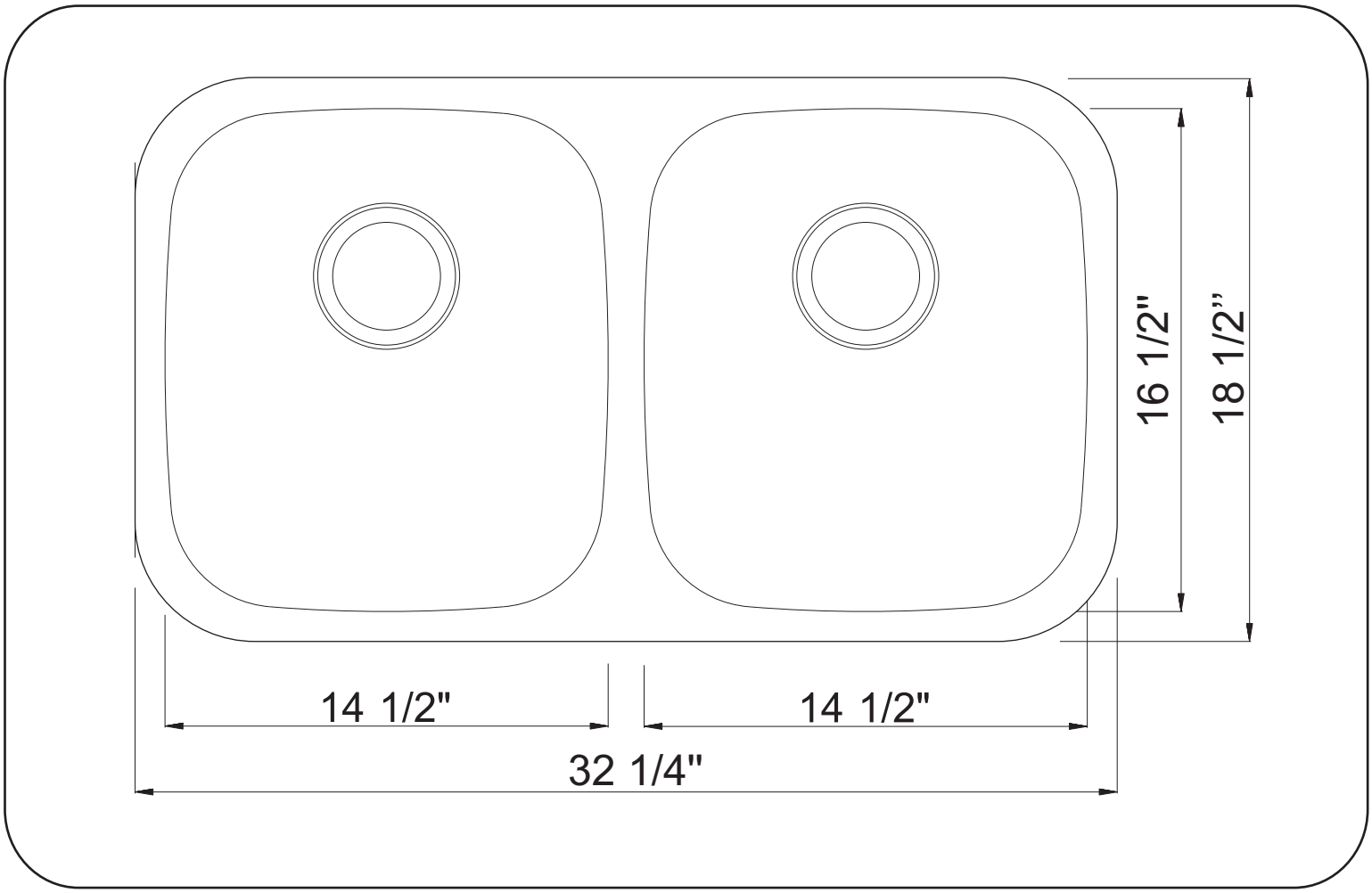

Diagram

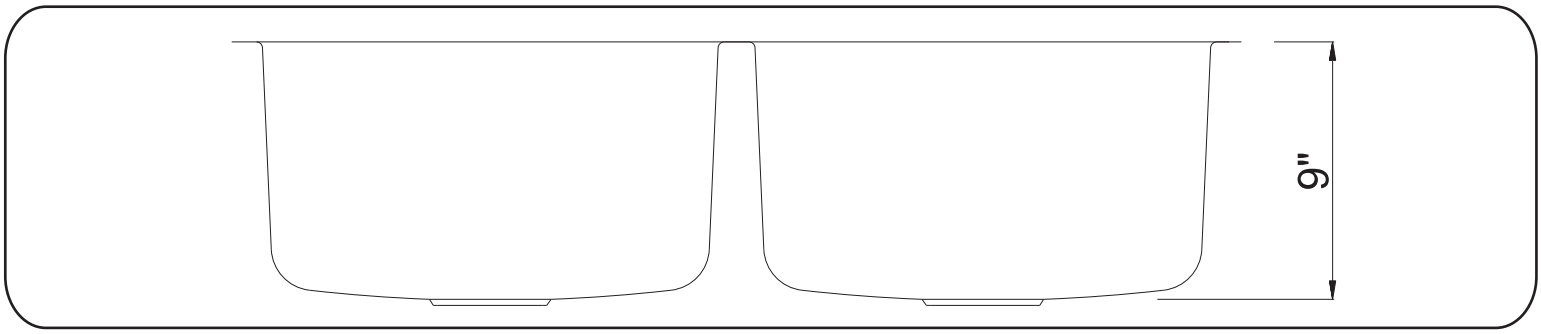

 Copyright ©2008 - 2009, Kraus USA Inc.

Kraus®

Under mount sink installation

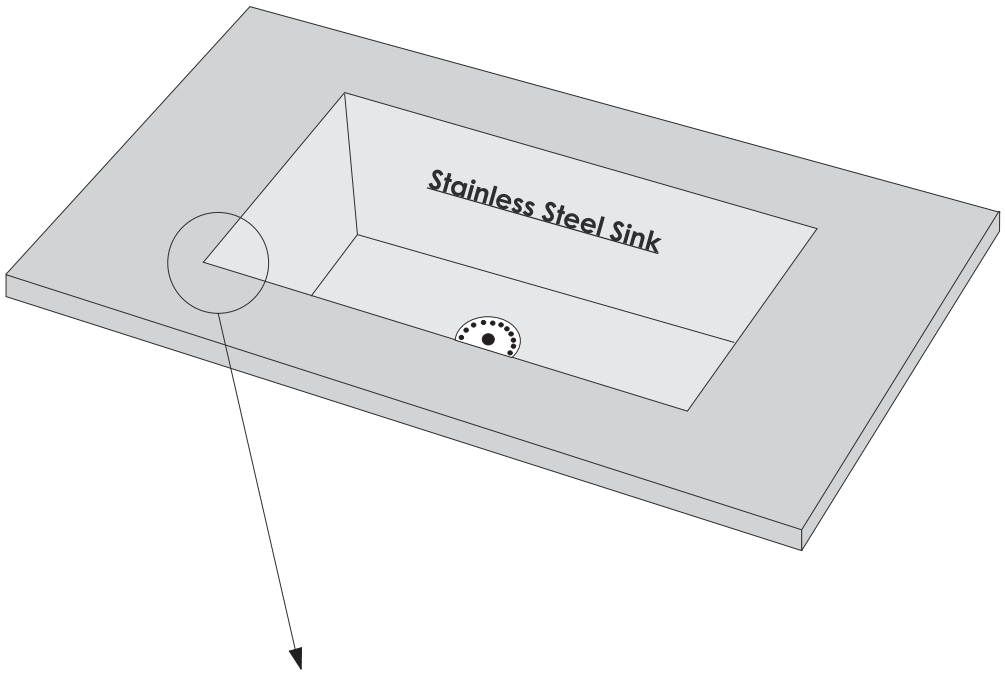

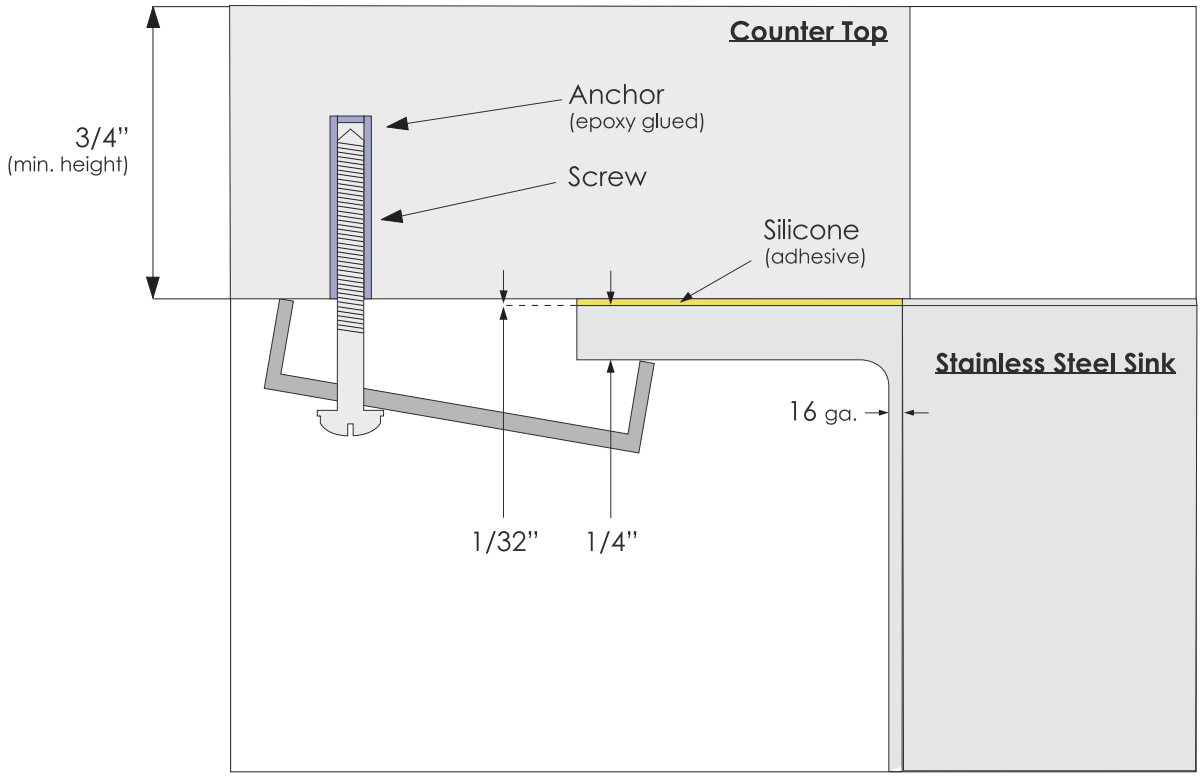

 Copyright ©2008 - 2009, Kraus USA Inc.

Kraus®

Product Use & Care

A Kraus Guide to Use and Care of Stainless Steel Sinks

"The Do's"

- When it comes to maintenance, the best thing you can do is be consistent in your cleaning. It is preferable to clean a little on a frequent basis than a heavy duty cleaning once in a while.
- You should make sure that the sink is always clean and dry when not in use. This is the best method of preventative maintenance. Keep the sink water spot free and shiny by rinsing and towel drying after every use.
- Keep the single clog free to prevent standing water which can lead to mineral deposit build up.
- If a mineral build up should occur, use a mixture of vinegar and hot water to remove the deposit.
- To clean your sink, use a non abrasive cleaning cloth combined with a mild cleaning procedure.
    - Use a soft cloth and liquid detergent on a mirror finish deck.
    - DO NOT USE ANY ABRASIVE MATERIALS ON A MIRROR FINISH.
    - For tougher stains use a mild abrasive cleaner like Ajax or Comet.
- Wipe the sink dry after cleaning to discourage any water spotting.
- Follow the direction of the grain when cleaning or scrubbing away stains. Scrubbing against the grain will show as a scratch.

"The Don'ts"

- Avoid using any abrasive steel wood pads as they will leave an iron residue that will eventually lead to rust and corrosion.
- Do not leave any steel or cast iron cookware in the sink for a long period of time. This may also leave iron particles that will corrode the sink
- Do not leave any cleaning materials such as sponges or rags in the sink for an extended period of time. Anything left in the sink can trap moisture which will eventually lead to staining
- Avoid using any abrasive cleaning materials such as steel wool pads on the polished finish of the sink, this will lead to scratching.

About Kraus

Kraus is a leading designer and manufacturer of a broad selection of unique bathroom fixtures and accessories, including vessel sinks, faucets, showers, vanities and bathroom accessories. Kraus incorporates its distinguished style with superior functionality and affordability maintaining the highest standards of quality in its vast product line.

The Kraus brand name represents a fusion of leading-edge technology and an eye toward design. Our design team continuously explores broader markets,seeking new trends while maintaining superior quality at unprecedented prices. The Kraus collection has the widest selection of exquisite styles for any type of décor, ranging from modern residences to countryside homes.

For Kraus, durability and reliability have always been vital components for achieving the highest standards of excellence. Every model we offer undergoes rigorous testing and inspection prior to distribution.
The key element of our success is our customers' satisfaction. As a result, our products are in high demand with shoppers worldwide.

 Copyright ©2008 - 2009, Kraus USA Inc.

KPF-1612

Single Lever Commercial Style Pull-Pull Down Kitchen Faucet

Chrome / Stainless Steel Finishes

Kraus®

SPECIFICATION SHEET

Material

Body: Brass
Handle: Zinc
Sprayer: ABS
Waterway: Braided Nylon

Spout

Swivel: 180
Design: Commercial Spring
Pull Down

Sprayhead

Flow Rate: 1.75 gpm (6.6L/min) @ 60 psi
Aerator: Neoperl/1.75GPM
Name: Cache Perlator Honeycomb
Function: Spray/Stream/Pause
Nozzles: Easy Clean Rubber Nozzles
Docking: Secure

Cartridge

Brand: Kerox
Size: 35mm
Style: Lever

Mounting

Holes: 1 Hole
Type: Brass Nut

Waterlines

Type : CAE
Flexible
Connections: 3/8"
Materials: Braided Stainless Steel
Included
Factory Installed

Dimensions

Faucet Dimensions: 21 1/4" x 8 1/2" x 2"
Handle Clearance: 2 3/4"

Accessories Included

Weight, Hex Wrench

Kraus Limited Lifetime Warranty: See website for details **www.kraususa.com**

1.800.775.0703 / customerservice@kraususa.com

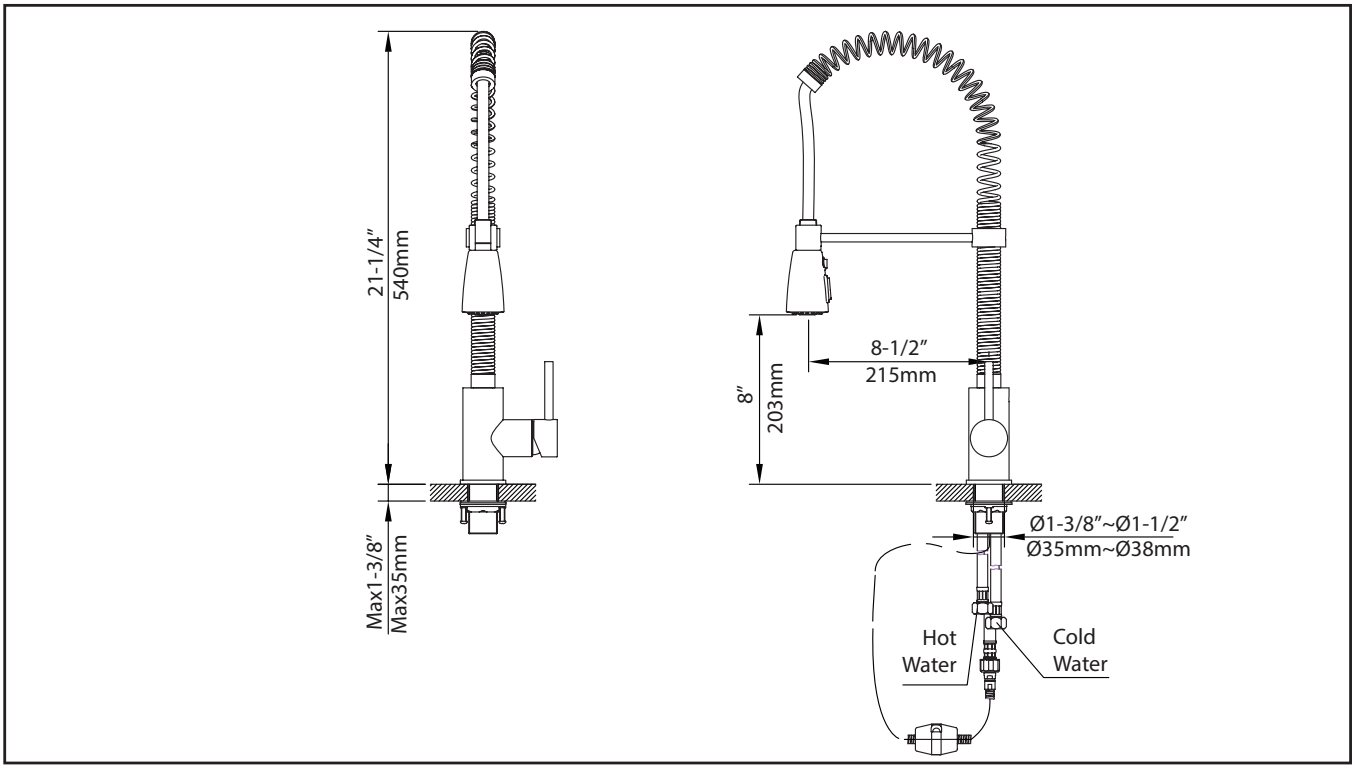

Codes/Standards: Meets ASME A112.18.1/CSA B125.1, NSF/ANSI Standard 61 certified by IAPMO, NSF/ANSI Standard 372 certified by IAPMO, CAL GREEN, CEC, DOE, ADA

REV. August 16, 2016

KSD-30

Soap Dispenser

SPECIFICATION SHEET

Finish

- Chrome
- Oil Rubbed Bronze
- Satin Nickel
- Black

Material

Brass

Features

- Solid Brass Construction
- Self-Priming Pump
- Refillable from Above
- Holds up to 14 oz. of Liquid
- Pump: 2-7/32″
- Spout: 3-17/32″

Kraus Limited Lifetime Warranty: See website for details **www.kraususa.com**

1.800.775.0703 / customerservice@kraususa.com

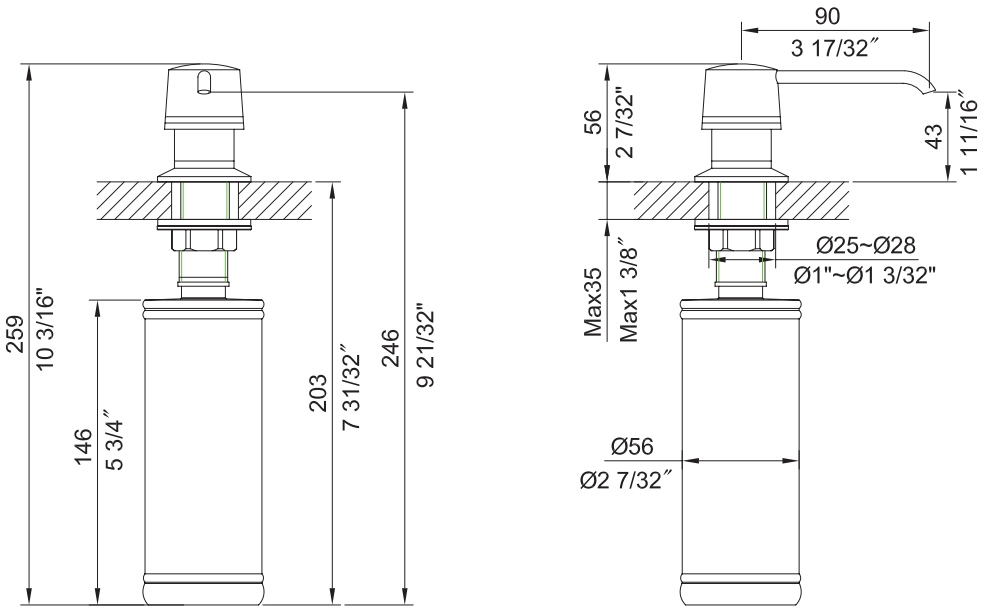

REV. August 18, 2016