Waste fitting

MODEL # 28957

Pure Freude an Wasser

GROHE America, Inc | 200 North Gary Avenue, Suite G, Roselle, IL 60172
Phone: +1 (800) 444-7643 | Fax: +1 (800) 225-2778 | us-customerservice@grohe.com

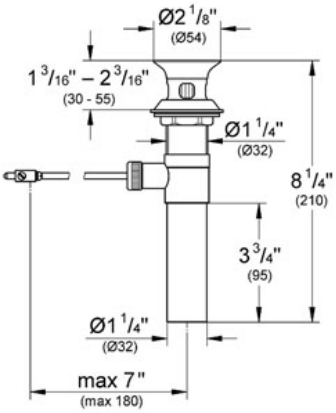

Product Description:
Waste fitting

Standard Specification:
- **GROHE StarLight®** finish

Color:
- ❑ 28957 000 chrome
- ❑ 28957 AV0 Satin Nickel inf
- ❑ 28957 BE0 Sterling inf
- ❑ 28957 EN0 Brushed Nickel
- ❑ 28957 L00 White
- ❑ 28957 R00 Polished Brass inf
- ❑ 28957 ZB0 Oil Rubbed Bronze