GROHE

WATER TECHNOLOGY

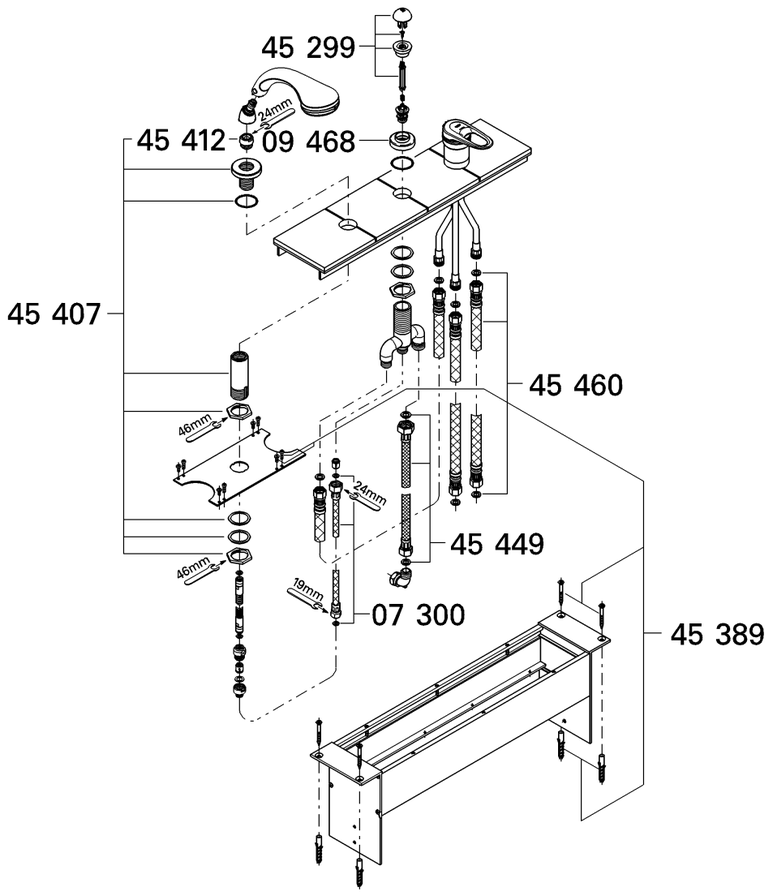

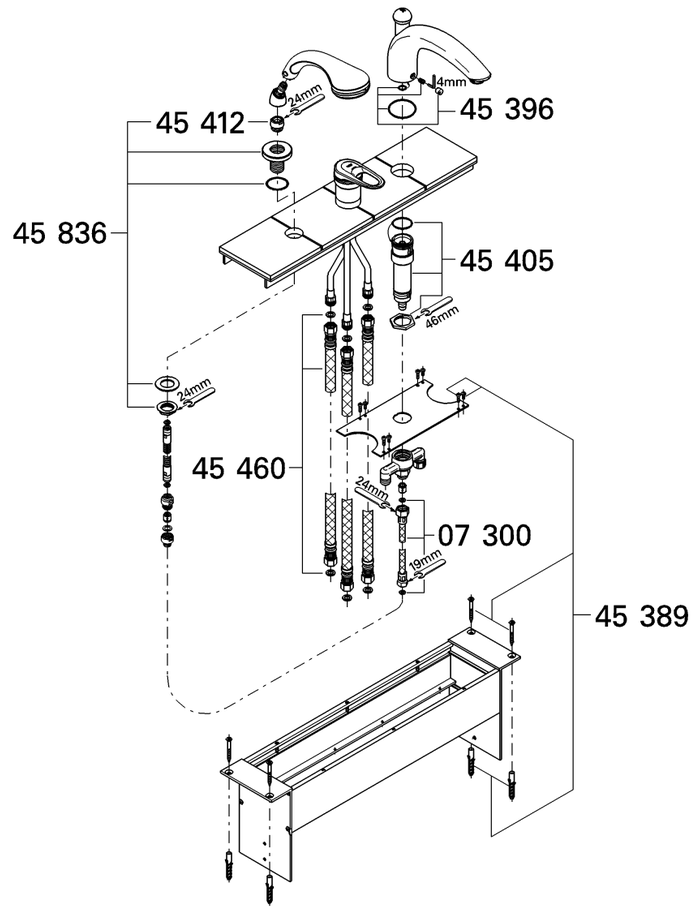

95.139.131/ÄM 21 989/03.00