GRANDERA
Three-hole basin mixer 1/2"
MODEL # 20419

Pure Freude an Wasser

GROHE

GROHE America, Inc | 200 North Gary Avenue, Suite G, Roselle, IL 60172
Phone: +1 (800) 444-7643 | Fax: +1 (800) 225-2778 | us-customerservice@grohe.com

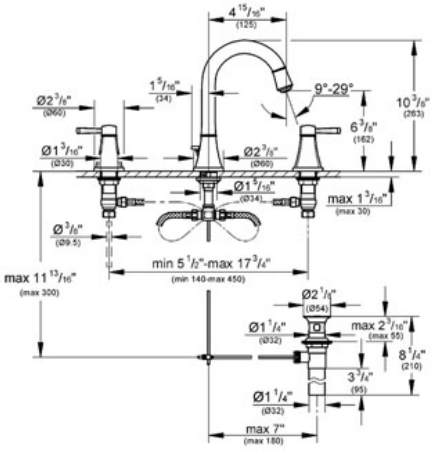

ADA

Product Description:
Three-hole basin mixer 1/2"

Standard Specification:
- **GROHE StarLight®** finish
- **GROHE EcoJoy®** technology for less water and perfect flow
- **GROHE AquaGuide®** adjustable aerator 5.7 l/min
- Valves hot/cold with 1/2" cartridge (90°)
- High spout
- Pressure resistant flexible connection hoses (between spout and side valves)
- 1 1/4" pop-up waste set
- Max Flow Rate 1.5 gpm (5.7 L/min)

Applicable Codes & Standards:
- Energy Policy Act of 1992
- ASME A112.18.1/CSA B125.1
- ICC/ANSI A117.1
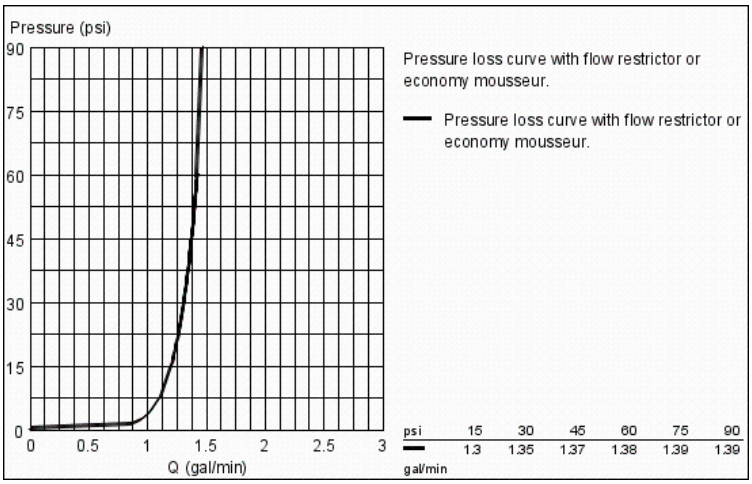
Color:
- ❑ 20419 000 chrome
- ❑ 20419 EN0 Brushed Nickel