GENEVA
Four-hole bath combination 1/2"
MODEL # 25506

Pure Freude an Wasser

GROHE

GROHE America, Inc | 200 North Gary Avenue, Suite G, Roselle, IL 60172
Phone: +1 (800) 444-7643 | Fax: +1 (800) 225-2778 | us-customerservice@grohe.com

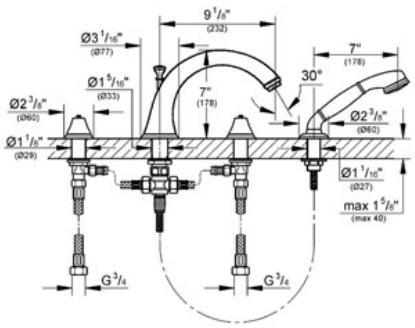

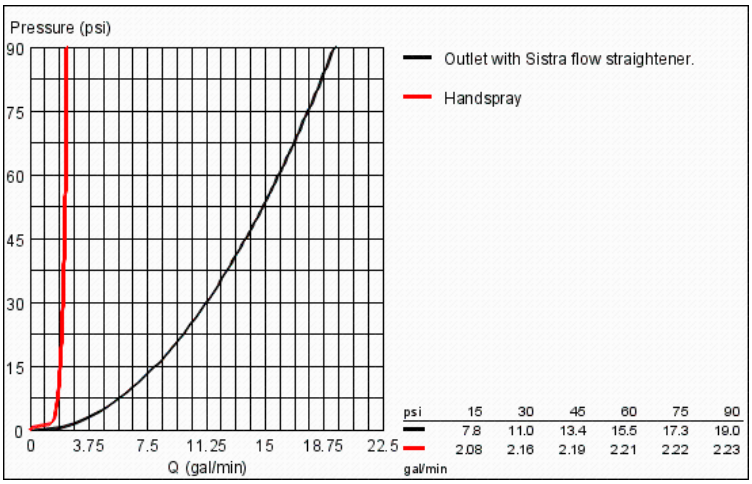

UPC C ®

Product Description:
Four-hole bath combination 1/2"

Standard Specification:
- **GROHE StarLight®** finish
- Handles sold separately
- 10" bath tub spout
- High version
- 1/2" valves

Geneva hand shower
- Shower hose (28 102)
- 79"
- Pressure resistant flexible connection hoses (between spout and side valves)
- For Geneva cross and lever handles (18 733 / 18 734)
- Max Flow Rate 2.5 gpm at 80 psi (9.5 L/min), 13 gpm at 45 psi (49.2 L/min) for Tub Filler

Applicable Codes & Standards:
- Energy Policy Act of 1992
- ASME A112.18.1/CSA B125.1

Color:
- ❑ 25506 000 chrome
- ❑ 25506 BE0 Sterling inf
- ❑ 25506 EN0 Brushed Nickel
- ❑ 25506 ZB0 Oil Rubbed Bronze