ATRIO
Three-hole basin mixer 1/2"
MODEL # 20069

Pure Freude an Wasser

GROHE

GROHE America, Inc | 200 North Gary Avenue, Suite G, Roselle, IL 60172
Phone: +1 (800) 444-7643 | Fax: +1 (800) 225-2778 | us-customerservice@grohe.com

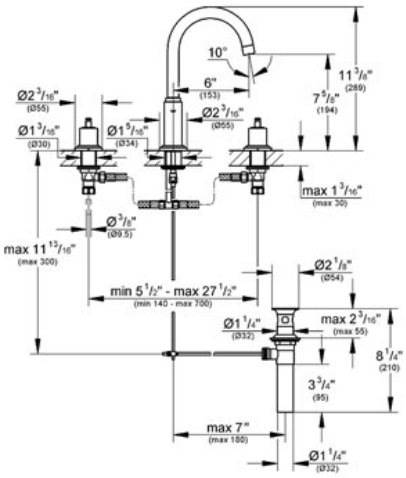

Product Description:
Three-hole basin mixer 1/2"

Standard Specification:
- **GROHE StarLight®** finish
- GROHE SilkMove® ceramic cartridge
- **GROHE WaterCare™**
- High version
- Handles sold separately
- Max Flow Rate 1.5 gpm (5.7 L/min)
- Less handles – order (18 026) or (18 027)(sold separately)

Applicable Codes & Standards:
- Energy Policy Act of 1992
- NSF 61
- ASME A112.18.1/CSA B125.1
- US Federal and State material regulations
- EPA WaterSense®
- CalGreen
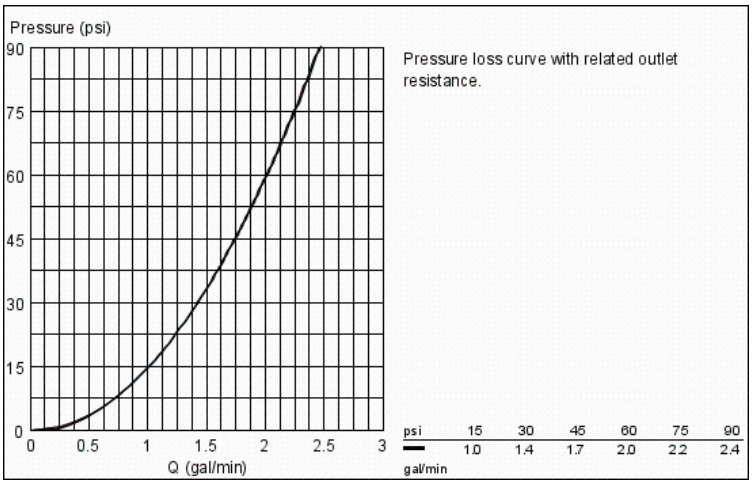
Color:
- ❑ 20069 000 chrome
- ❑ 20069 EN0 Brushed Nickel