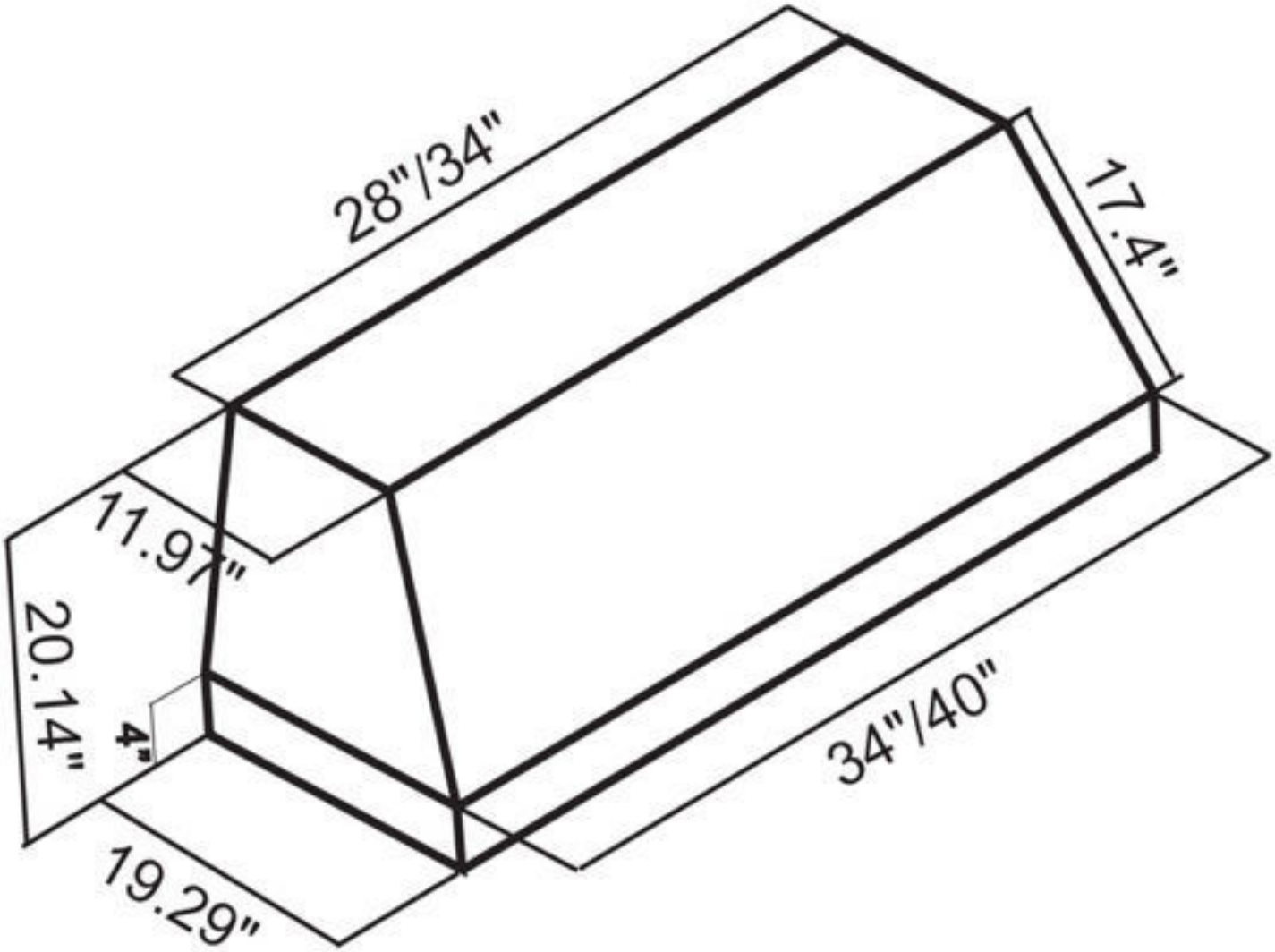
28"/34"
17.4"
11.97"
20.14"
4"
34"/40"
19.29"