Clik 1

ADA | **CUSTOM OPTIONS**

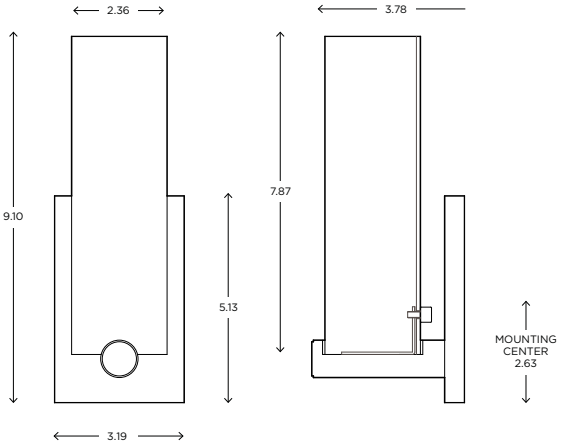

The absolute purity of form defines Clik. Its shiny opal glass appears to float effortlessly above its minimalist structure. Every detail is attended to here. Nothing that is not needed is present. It is available in two formats each communicating purity of form.

DIMENSIONS

9.10"H x 3.19"W x 3.78"P

LAMPING / VOLTAGE

[1] 60W Max Incandescent T10 Medium Base
635 Lumens, 120V, dimming
[1] 18W Fluorescent CFL GX24q-2 Base
1200 Lumens, 3000K, 120V, non-dimming
[1] LED Unit 3000K

FINISH

Brushed Nickel, Polished Nickel, Polished Chrome

DIFFUSER

Shiny Opal Glass

Customize this fixture to your specific needs

*Requires standard single gang jbox installed in same orientation as fixture

Finish shown: Polished Chrome

Ayre Architectural Lighting
14 Bristol Drive, Unit B
South Easton, MA 02375

Tel 508.205.0545
Toll Free 877.722.AYRE
Fax 508.205.0548

ayrelight.com

Clik 1

ADA | **CUSTOM OPTIONS**

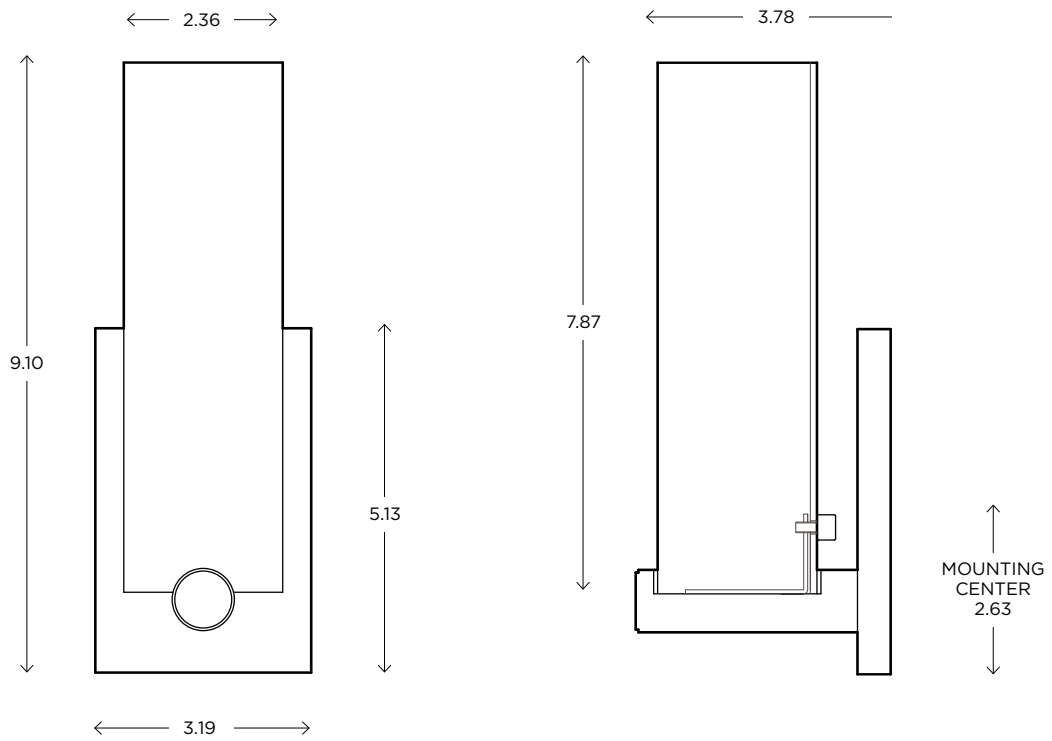

Refer to the instructions for correct j-box placement and installation requirements.

Est. Weight: 4.11 lbs

MODEL
CLIK SCONCE // CLK1

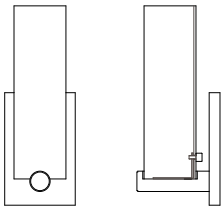

DIMENSIONS
Height: 9.10
Width: 3.19
Projection: 3.78

FIXTURE TYPE
ADA Sconce / A

DIFFUSER
Shiny Opal Glass / SO

FINISH
Brushed Nickel / BN
Polished Nickel / PN
Polished Chrome / CH

LAMPING / VOLTAGE
INCANDESCENT / INC
[1] 60W T10 Medium Base
120V, dimming

FLUORESCENT / FL
[1] CFL 18W QUAD, GX24q-2
Base, 120V, non-dimming

LED / LED
[1] 3000K 120V

RELATED PRODUCTS

CLIK SCONCE // CLK2
ADA

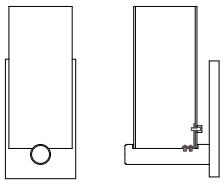

CIRC SCONCE // CIR1
ADA

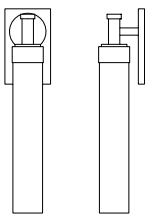

STUDIO SCONCE // STU1
ADA

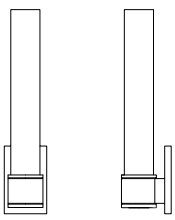

PETAL PENDANT // PET1

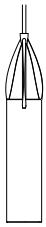

Ayre Architectural Lighting
14 Bristol Drive, Unit B
South Easton, MA 02375

Tel 508.205.0545
Toll Free 877.722.AYRE
Fax 508.205.0548

ayrelight.com