119.0437.315

INSTALLATION TYPE : **Other** | INSTALLATION TYPE : **Sink/Worktop** | FINISH : **Satin Nickel** | STYLE : **Contemporary** | FAMILY : **Kitchen solutions** | SERIE : **Square** | MODEL : **SD-880N**

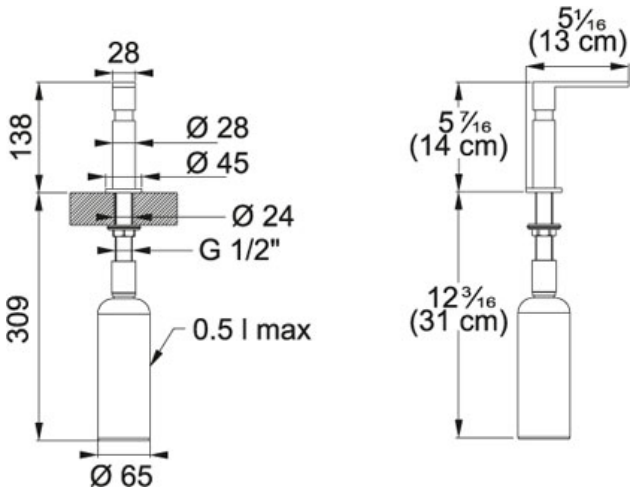

TECHNICAL DATA	
Remarks FKS	Require 1" Hole
Version	Soapdispenser