PROJECT: _____

FIXTURE TYPE: _____

LOCATION: _____

CONTACT/PHONE: _____

élan

Model #	83447
Collection	sava™
Finish	Black w/ Chrome
Shade/ Diffuser	Acrylic
FIXTURE: Length/Dia. Width/Ext. Height	40.25" [102cm] 2" [5cm] 4" [10.2cm]
Maximum Hanging Height	102.75" [261cm]
Light Source/ Bulb Info.	LED Module .1W x 198 = 19.8W Total
Included?	Integrated
Driver/ Transformer	Electronic Class 2 Driver, Dimmable
Input	110-130VAC, 50/60 Hz, .5A
Dimmable	Yes
Color	3800K
Lumens	1042
Notes:	

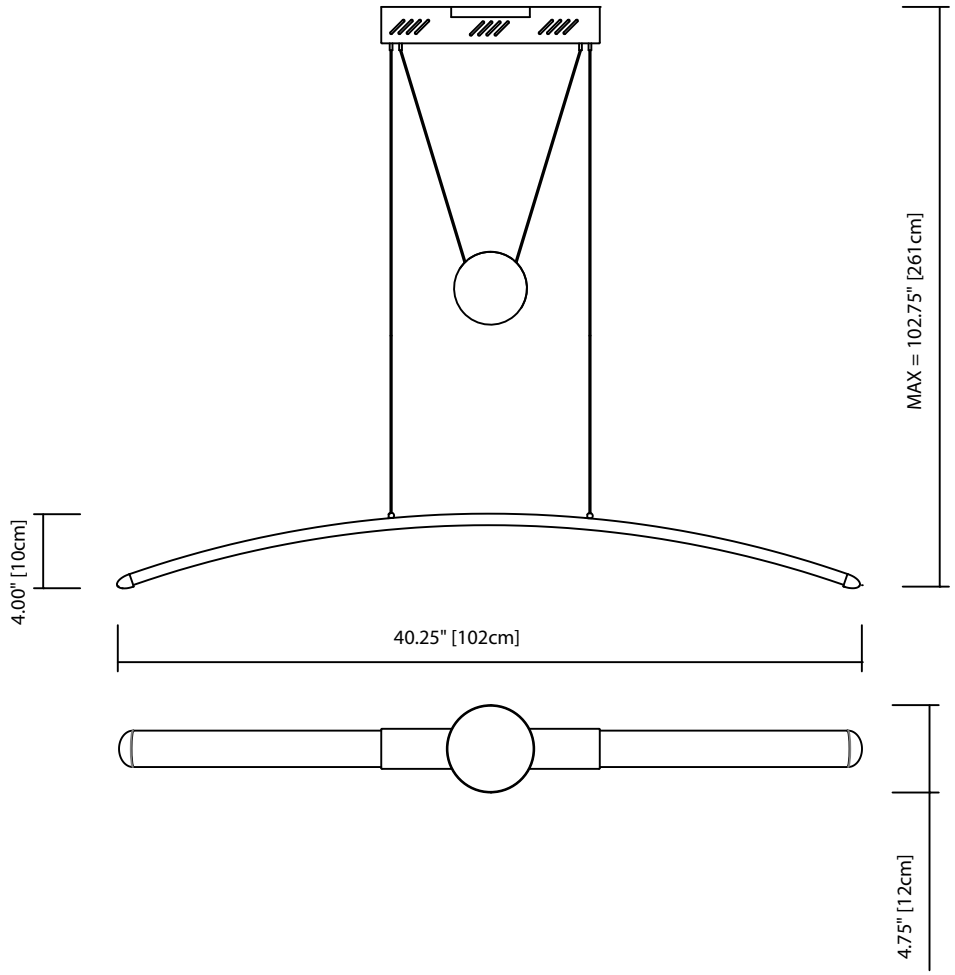

Intertek

A KICHLER COMPANY

www.elan-lighting.com