AXOR Uno
Axor Uno Towel Bar, 24"
Finishes : **chrome** Part no. : **41560000**

Description

Features
- Wall-mounted

Item details

List Price	$ 210.00

Compliance

Product image

Scale drawing

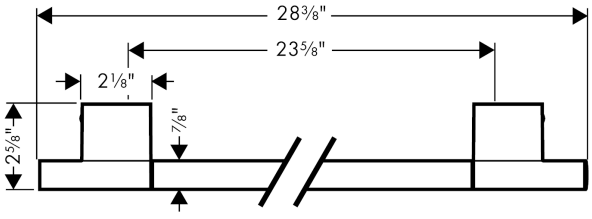

AXOR Uno
Axor Uno Towel Bar, 24"
Finishes : **chrome** Part no. : **41560000**

Exploded drawing

Year of production: **>04/01**

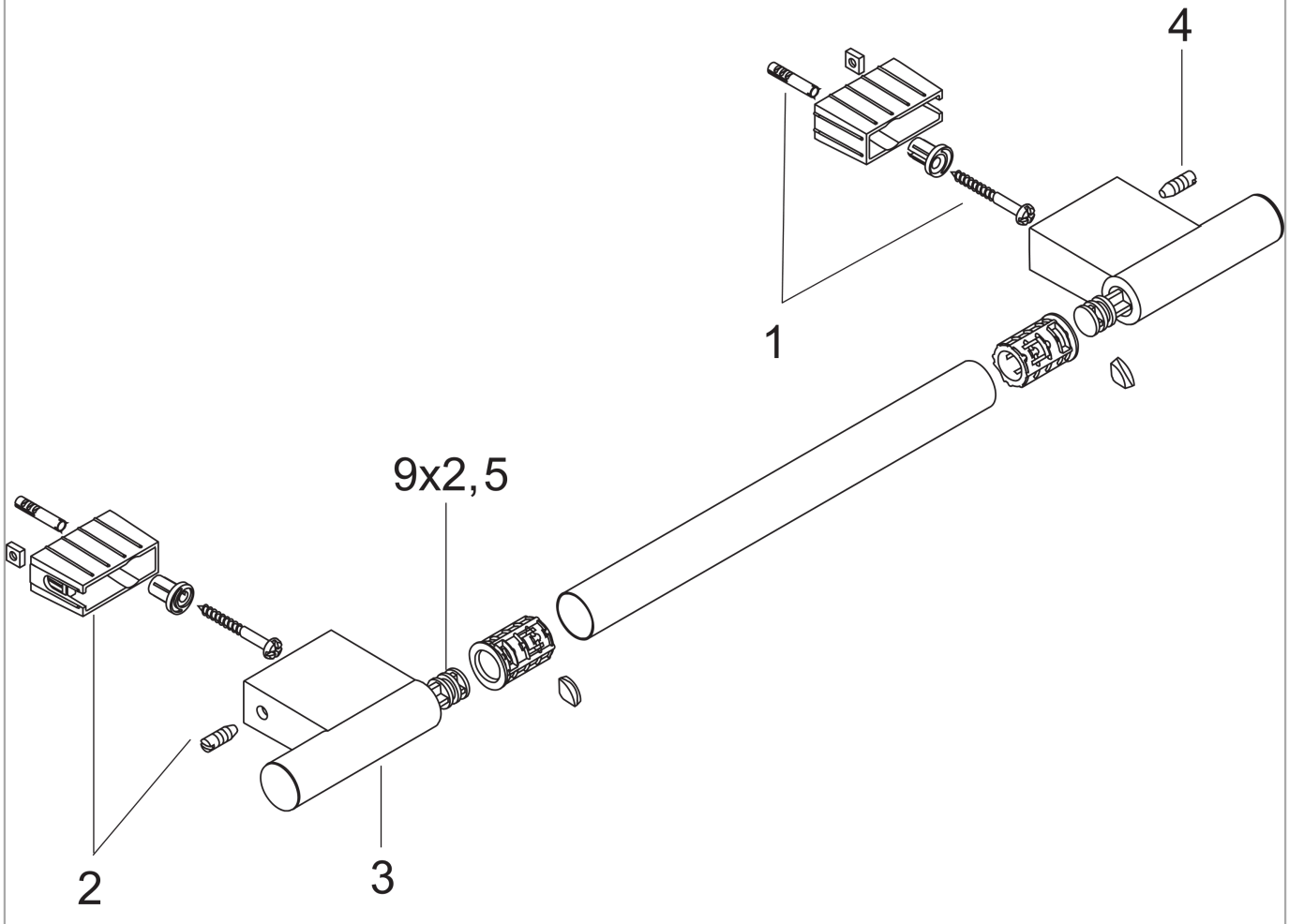

AXOR Uno
Axor Uno Towel Bar, 24"
Finishes : **chrome** Part no. : **41560000**

Spare parts list

Year of production: **>04/01**

Pos.	Description	Part no.	Price	PU
1	mounting set	40915000	-	1
2	support cpl.	96486000	-	1
3	cover	96485000	-	1
4	screw	97795000	-	1

Axor Uno
Axor Uno Towel Bar, 24"
Finishes : **Chrome** Part no. : **41560000**

Description

Features
- Metal

Item details

List Price	$ 202.00

Product image
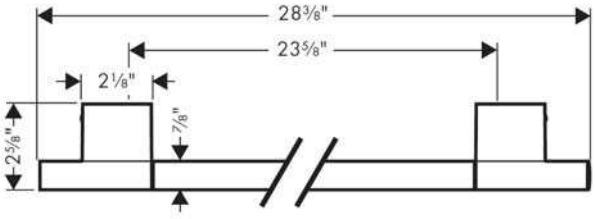
Scale drawing