AXOR

**AXOR Citterio**
**Bar Faucet, 1.5 GPM**
Finishes : Part no. : **39851831**

**Features**

- Swivel range 150°
- Aerated spray
- Deck mounted
- Flow: 1.5 GPM (5.7 L/Min)
- Ceramic cartridge
- ⅜" connections

## Item details

| | |
|---|---|
| List Price | $ 1,124.00 |

## Technology

Quick Clean

## Compliance

ADA

UPC C ®

## Product image
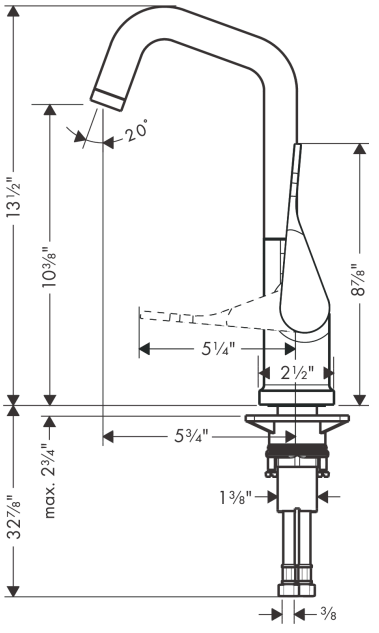
## Scale drawing