SANTEC
FLUID IMAGINATION

ITEM NUMBER

2255KC _ _-_ _

KRISS COLLECTION
ROMAN TUB FILLER WITH HAND HELD SHOWER - “KC” HANDLES

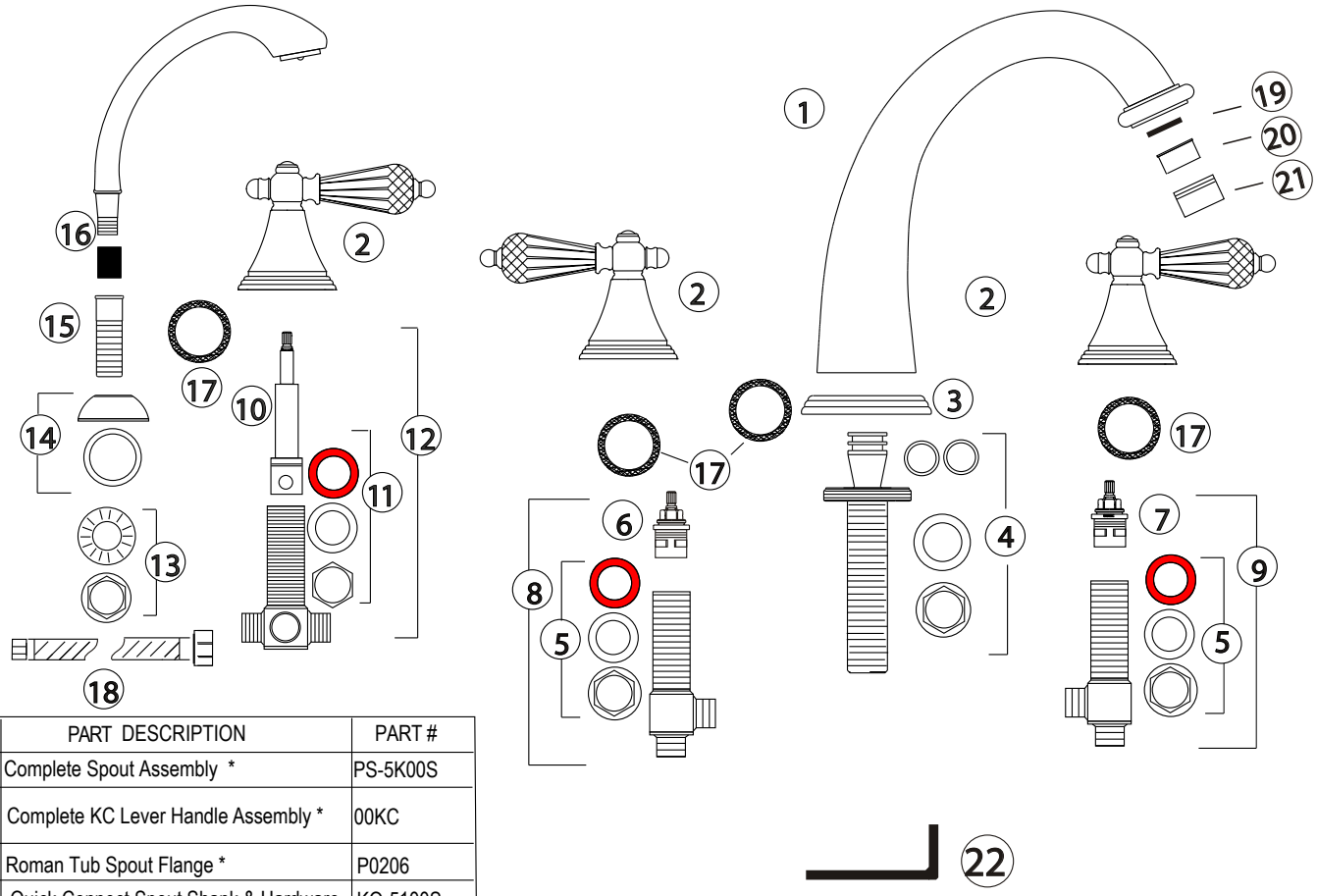

#	PART DESCRIPTION	PART #
1	Complete Spout Assembly *	PS-5K00S
2	Complete KC Lever Handle Assembly *	00KC
3	Roman Tub Spout Flange *	P0206
4	Quick Connect Spout Shank & Hardware	KQ-5100S
5	Valve Body Mounting Hardware	
6	Hot Cartridge	P0420-SH
7	Cold Cartridge	P0420-SC
8	Complete Hot Valve	P0495
9	Complete Cold Valve	P0496
10	Diverter Cartridge	P0500R
11	Diverter Mounting Hardware	
12	Complete Diverter	P0500
13	Hand Shower Mounting Hardware	PM-Z11
14	Hand Shower Flange and Washer *	Z-200-1
15	Guide Tube *	Z-200-2
16	Hand Shower Unit *	Z-200-5
17	Flange Washer	PM-400
18	Hand Shower Hose	HS-600/HS-700
19	Aerator Washer	PM-356
20	Roman Tub Aerator without Restrictor	PM-355
21	Aerator Housing *	P0255L
22	Allen Key for Roman Tub Spout	

* Please specify the finish when ordering the part.

KEEP THIS INSTRUCTION BOOKLET FOR FUTURE REFERENCE

FLUSH BOTH SUPPLY LINES BEFORE INSTALLATION

AFTER FLUSHING, SHUT OFF BOTH SUPPLY LINES

MINIMUM HOLE SIZE FOR THE SPOUT AND HANDLE TRIM IS 1 1/4" AND MAXIMUM IS 1 1/2"

SPOUT INSTALLATION

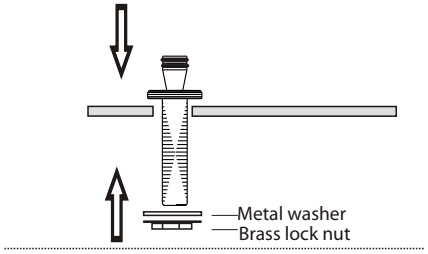

1
- Remove the Quick Connect Spout Shank and Mounting Hardware from the box. Remove the mounting hardware (metal washer and brass lock nut) from the Quick Connect Shank.
- From the top of the deck, slip the quick Connect shank through the assigned spout hole.
- Secure the quick connect shank by putting the washer and locknut back on the shank. Tighten the lock nut firmly.

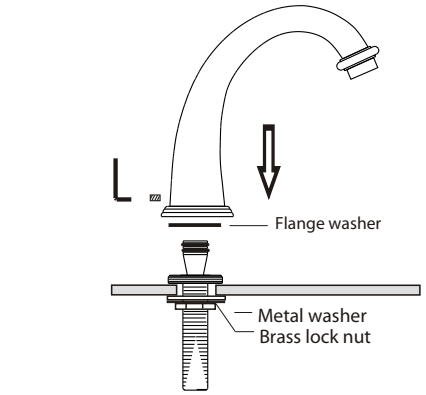

2.
- Remove the faucet from the box.
- From the top of the deck, slip the spout (1) with the flange(3) and flange washer (17) onto the quick connect shank top. Align the spout and tighten the set screw with the Allen Key (22) provided.

3
- Connect the spout shank to one of the outlet port (OUT) of the diverter valve after the diverter valve is installed. **

Note: for better installation it is advisable to place silicone caulking around all holes on the top of the deck

If the trim is ordered separately, please keep the shank protector on the quick connect shank at all time to avoid damages to the unit.

HANDLE INSTALLATION

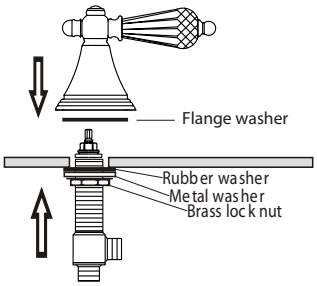

1.
- Unscrew the pre-assembled handle trim (2) from the valve body.
- Slip the valve body (8) or (9) up from the bottom of the tub through the appropriate hole next to the spout. From tub top, screw the handle trim (2) with flange washer (17) back onto the valve body. The washer (17) must be gently pressed against the surface. Make sure that the handles turn freely in both directions.

2
- Position the valve body side outlet towards the diverter valve (12) for easier pipe connection. Align the handle lever and tighten lock nut (5) firmly. Repeat the same procedure for the opposite side.
- Connect the water supply lines to the bottom inlets of the valve bodies. **
- Connect the valve body side outlet to the inlet (IN) of the diverter valve (12) after the diverter is installed. **

DIVERTER INSTALLATION

1
- Unscrew the pre-assembled diverter handle trim (2) from the diverter (12).
- Slip the diverter valve body (12) up from the bottom of the tub through the appropriate hole. From tub top, screw the handle trim (2) with the flange washer (17) back onto the diverter. The washer (17) must be gently pressed against the surface. Make sure that the handle turns freely in both directions.
- Align the handle lever and tighten the lock nut (11) firmly.

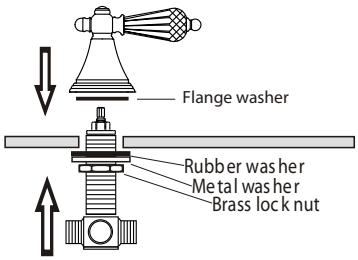

** The spout, handle valve bodies and diverter can be connected with flex hoses (not provide by Santec) or copper pipe soldering. Please note that when soldering connections, do not use excessive heat. Excessive heat can damage the joints increasing probability of leakage.

HAND SHOWER INSTALLATION

1
- Slip the guide tube (15), flange (14) and the washer down from the top of the tub through the appropriate hole. Slip the mounting hardware (13) from the bottom of the tub, first the crimped metal washer then the brass lock nut. Tighten the lock nut firmly.

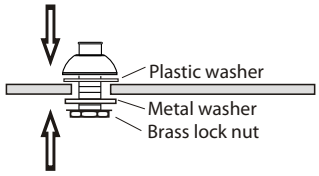

2
- Wrap Teflon seal tape around the threaded outlet end (OUT) of the diverter valve. Connect and tighten the 1/2” female side of hose (18) onto the outlet.
- Slip the other end of the hose (3/8”) up through the guide tube (!5), connect and tighten the hose to the hand shower unit (16).

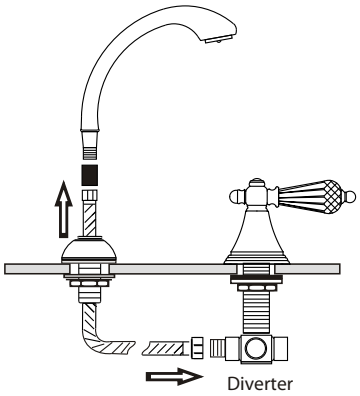

WATER TEST

- Turn on the cold water supply.
- Use the handle from the faucet set to turn the valve on and off.
- Check for leaks. If water leaks from any of the connections merely tighten the connections until the leak stops.
- Repeat the same procedure for the hot side

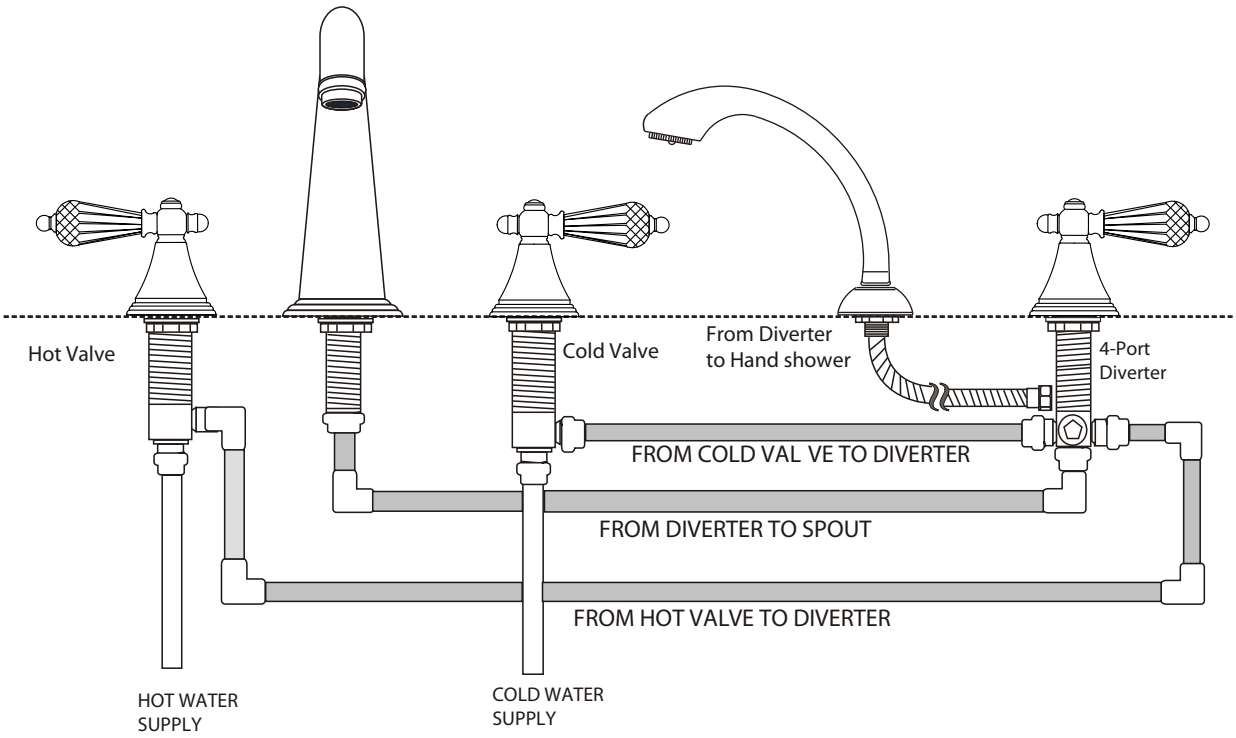

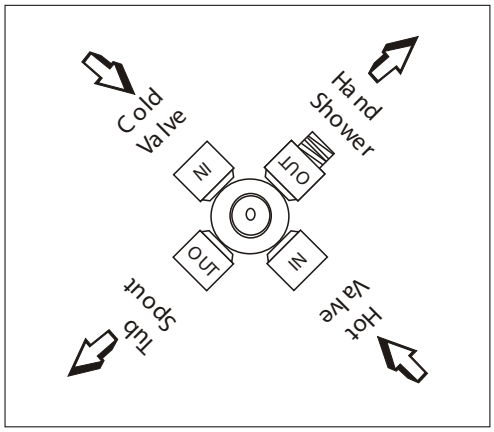

Santec Inc.
3501 Challenger Street, Torrance, CA 90503
Tel: (310) 542-0063 Fax (310) 542-5681
www.santecfaucet.com

04/02