SANTEC
FLUID IMAGINATION

Rev. 5/16
DESIGNER SERIES
Ava Crystal

PRODUCT SPECIFICATION SHEET

ITEM # 9950CR-TM
TRIM
Roman tub filler

- “CR” style handles
- 16 GPM
- ROUGH NOT INCLUDED
- USE P0006 ROUGH

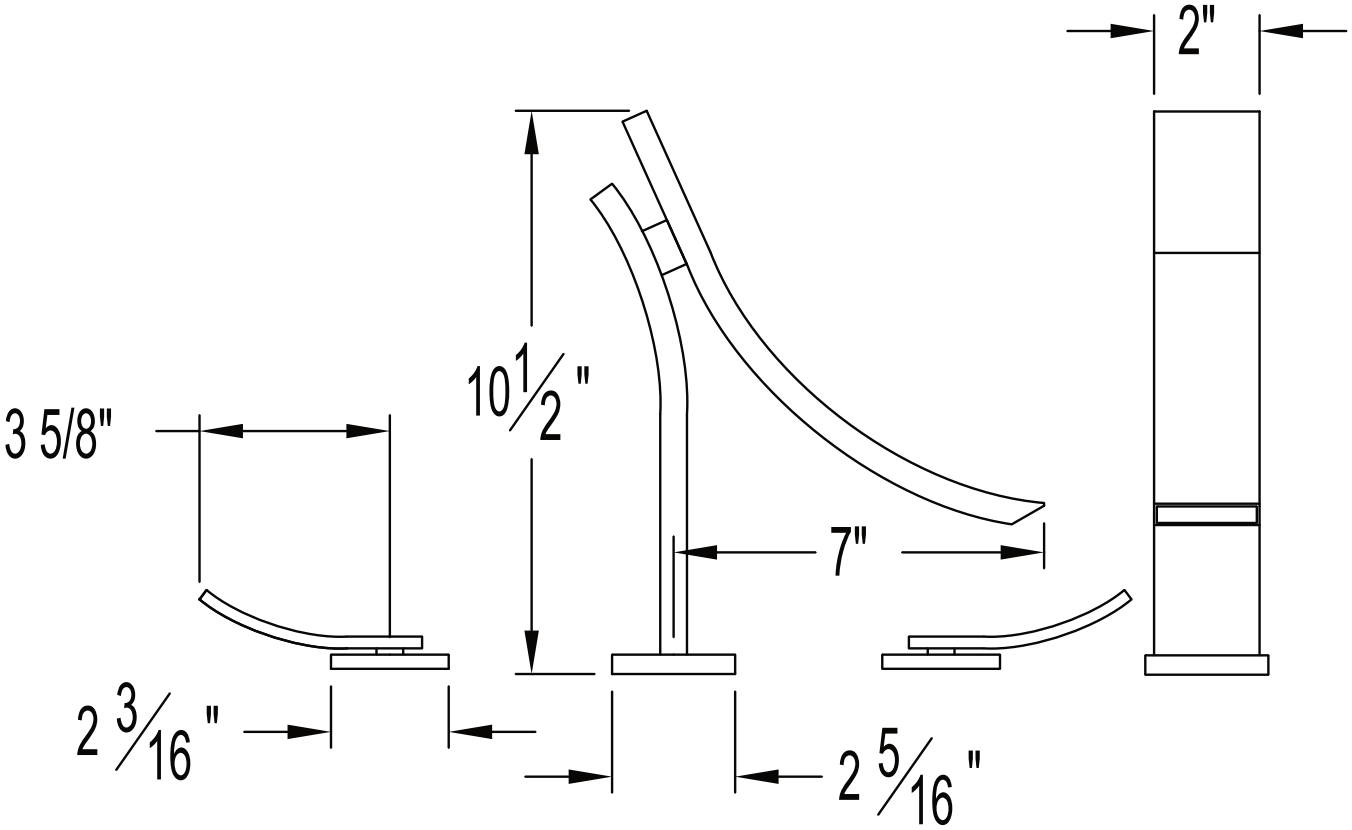

The measurements shown are for reference only. Products and specifications shown are subject to change without notice.

www.santecfaucet.com | P: 310.542.0063 F: 310.542.5681