ella

ACCESSIBLE BATHROOMS

Narrow 26" Wide Dual Massage Walk In Bathtub

265304L Left Hand Door and Drain

265304R Right Hand Door and Drain

Actual Size: 26" W x 53" L x 40" H
Shipping Size: 27" W x 54" L x 42" H
Shipping Weight: 300 lbs.
Net Weight: 235 lbs.
Water Capacity: 85 gal. US (unoccupied)
40-60 gal. US (occupied)

Options:

- White or Biscuit Shell
- Left or Right Hand Door/Drain
- Soaking
- Hydro Massage
- Air Massage

Included Features:

1. Tub Shell - Gel Coat Fiberglass
   - High quality fiberglass material
   - Excellent color uniformity
   - Durable gel coat surface
   - Easy-to-clean high gloss finish
2. Stainless Steel Frame
3. 6.83" Threshold
4. 17" Seat Height
5. 19.5" Seat Width
6. Anti-slip floor
7. Built-in safety grab bar
8. Removable access panels
9. Wall extension kit to fit in standard 60" opening
10. Auto Purge System
11. Therapeutic Air Massage System
    - Push control
    - Adjustable three (3) speed air pump with heater
    - Eighteen (18) air jets
    - In-line Air Heater
12. Hydrotherapy Massage System
    - Six (6) adjustable direction Hydro jets
    - Air flow regulator for adjustable hydro massage
    - Push control
    - In-line Water Heater (1.5 KW)
13. Five (5) Piece Huntington Brass Roman Faucet in Chrome
    - Jewel Arched Solid Brass Spout
    - 3/4" Valve, 3/4" Ports
    - Ceramic Disc Cartridges
    - Quick Connect Spout Installation
    - NPS Connections
    - 18 GPM (Average) @ 60 PSI

Plumbing:

- Two (2) 30" Supply Lines with 3/4" FIP connections
- +/- 3 minute 1 1/2" Quick Drain with overflow
- Drain opener with extension handle

Electrical:

- 120v. Standard Plug-In for 0.75hp Hydro Pump
- 120v. Standard Plug-In for 0.50hp Air Pump

Warranty:

- 25 Year warranty on tub body
- Lifetime warranty on door seal and air jets
- 5 Year on faucet and pumps*

*For more information please visit www.ellasbubbles.com.

Disclaimer:
The walk-in bathtub comes without pre-drilled faucet holes. The faucet is installed by customer (contractor). The standard PVC pipe for drain overflow is measured, cut at the job site and supplied by customer (contractor).

ella

ACCESSIBLE BATHROOMS

Narrow 26" Wide Dual Massage Walk In Bathtub 265304L / 265304R

*Left hand door and drain shown

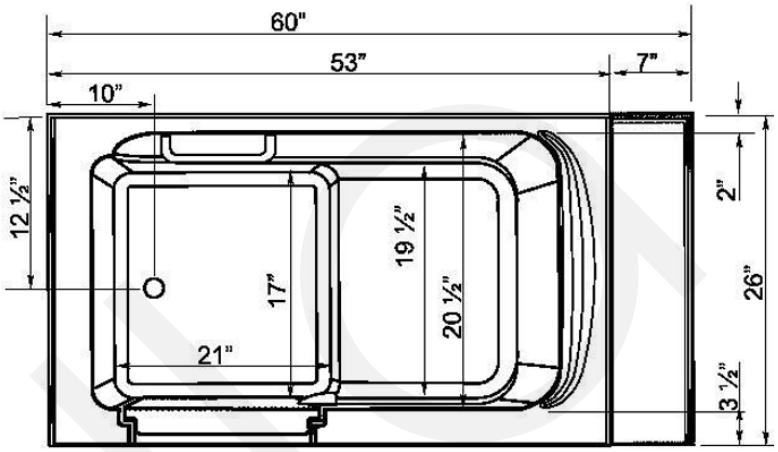

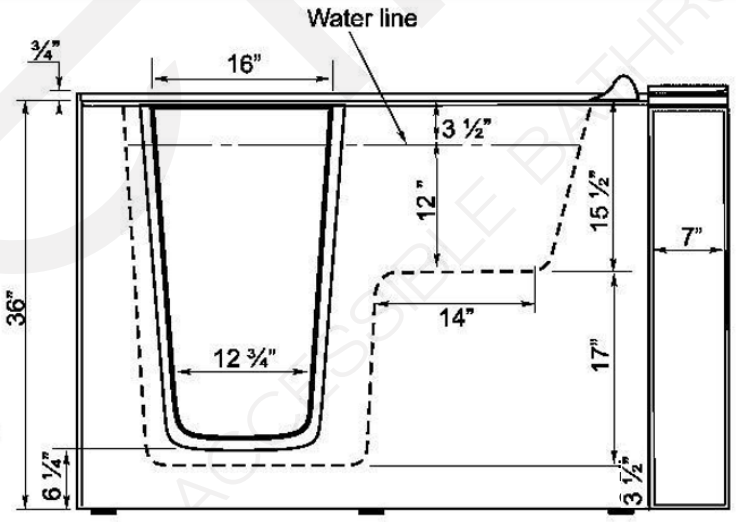

Disclaimer:
In an effort to continually improve our product, specifications and configurations are subject to change without notice. Before ordering or installing, consider future access to essential equipment.