Jaylen Towel Ring

Model #: 4840-TR-

JACLO
Confidence from start to finish.™

FEATURES:

- All brass 6"open towel ring
- Universal mounting hardware included
- 3 7/8" projection

AVAILABLE FINISHES:

Polished Chrome (PCH)	Satin Chrome (SC)	Bronze Umber (BU)
Satin Nickel (SN)	Pewter (PEW)	Caramel Bronze (CB)
Polished Nickel (PN)	Antique Brass (AB)	Antique Copper (ACU)
Oil-Rubbed Bronze (ORB)	Polished Brass (PB)	Polished Copper (PCU)
Vintage Bronze (VB)	Satin Brass (SB)	Rose Gold (RG)
Matte Black (MBK)	Satin Gold (SG)	Polished Gold (PG)
Black Nickel (BKN)	Bombay Gold (BG)	Jewelers Gold (JG)
Europa Bronze (EB)	White (WH)	Sedona Beige (SDB)
Tristan Brass (TB)		
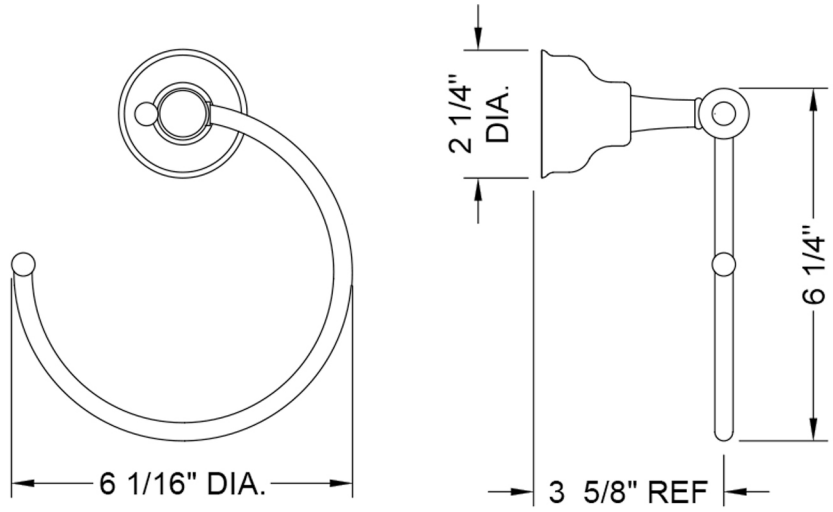
SPECIFICATION DRAWING: