23FMCCHCH
Specifications

Tel: 905-851-6780
Fax: 905-851-8031
Toll Free: 800-461-5901

Specifications

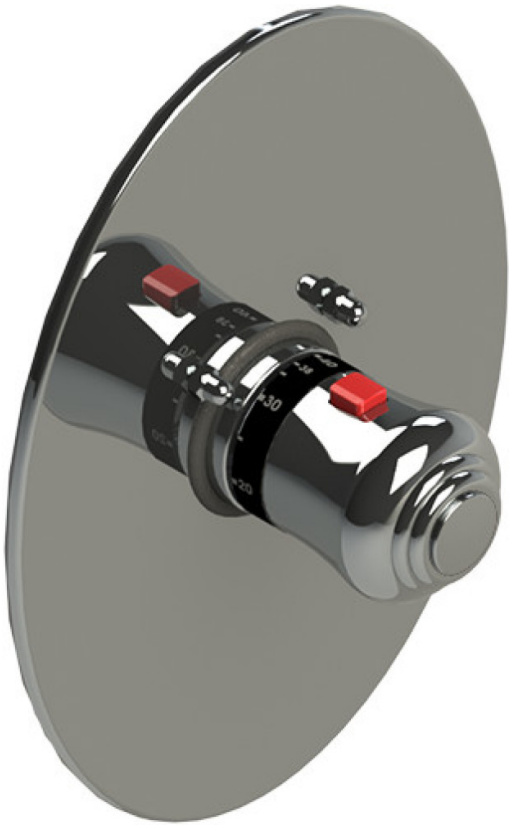

TEMPERATURE CONTROL VALVE WITH STOPS TRIM ONLY

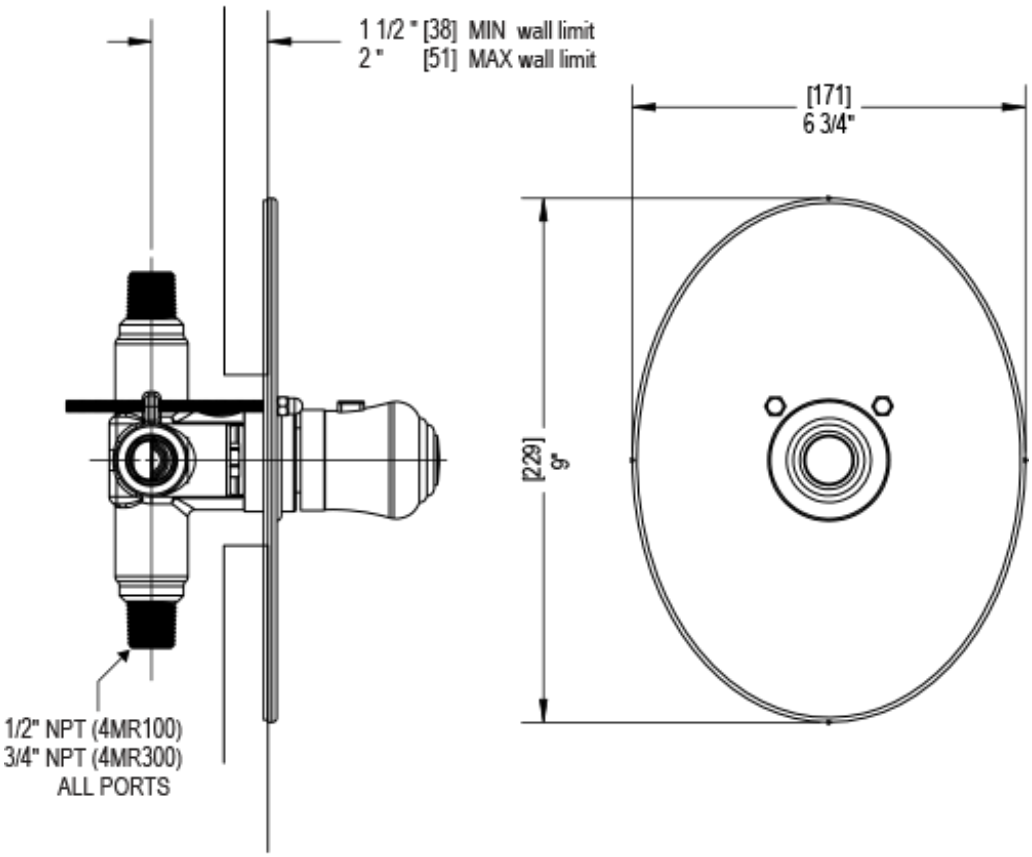

Tel: 905-851-6780
Fax: 905-851-8031
Toll Free: 800-461-5901

Specifications

THREE WAY DIVERTER WITH SHUT-OFFS IN BETWEEN FUNCTIONS, TRIM ONLY

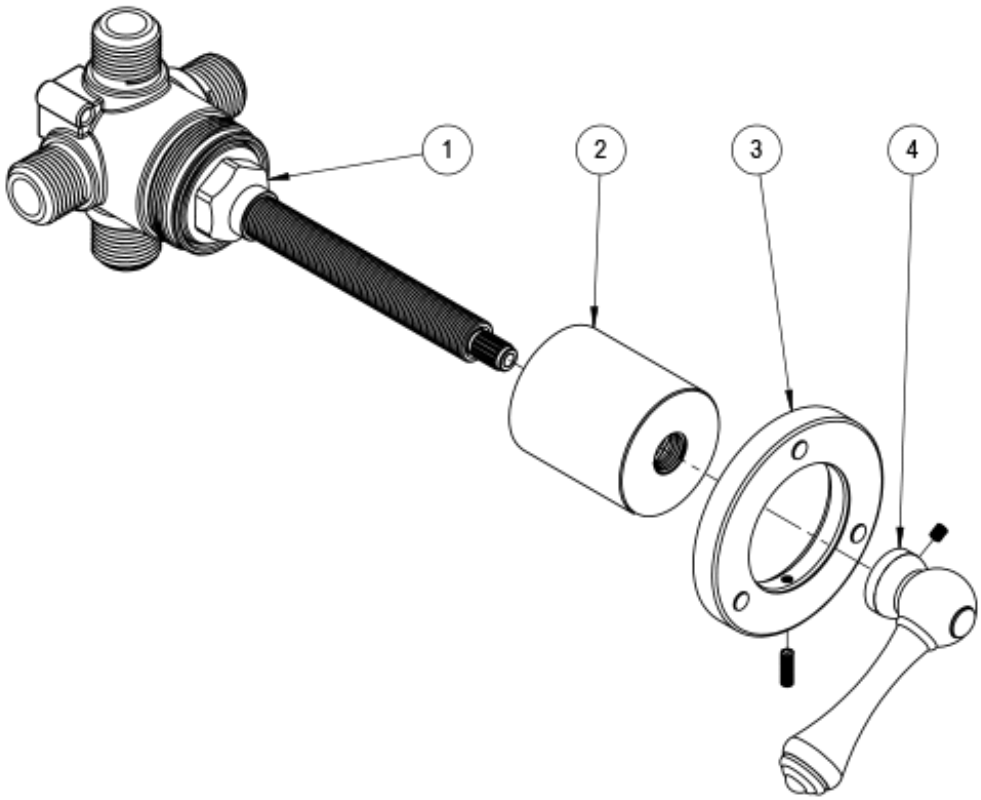

Tel: 905-851-6780
Fax: 905-851-8031
Toll Free: 800-461-5901

Specifications

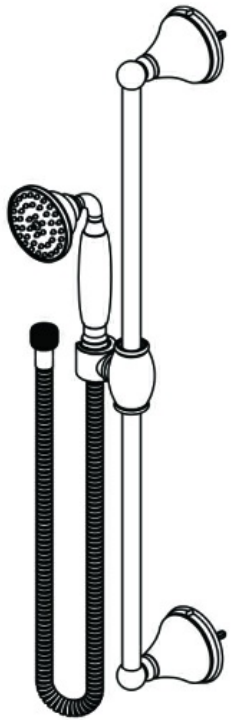

ADJUSTABLE SLIDE BAR WITH HAND HELD SHOWER ASSEMBLY

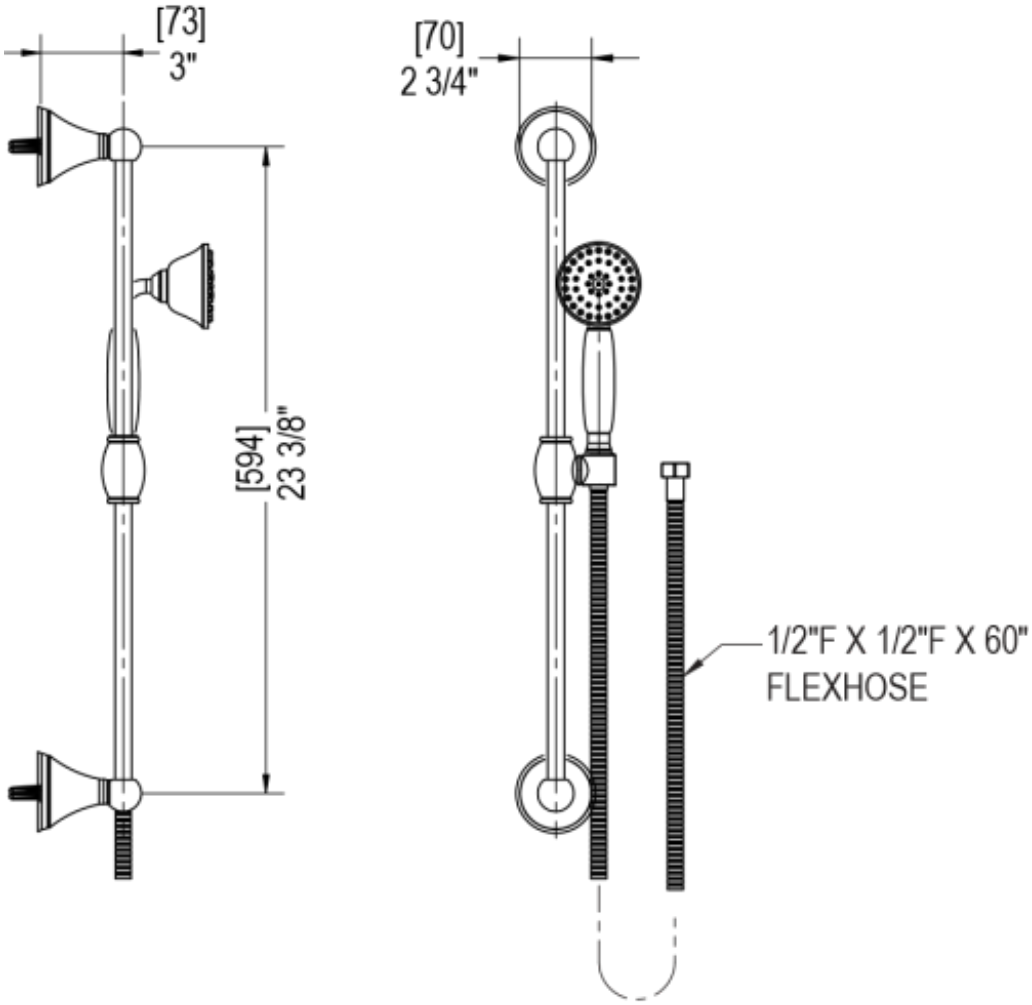

Tel: 905-851-6780
Fax: 905-851-8031
Toll Free: 800-461-5901

Specifications

INTEGRAL SUPPLY WITH 1/2" NPT X 1/2" NPSM X 3" NIPPLE

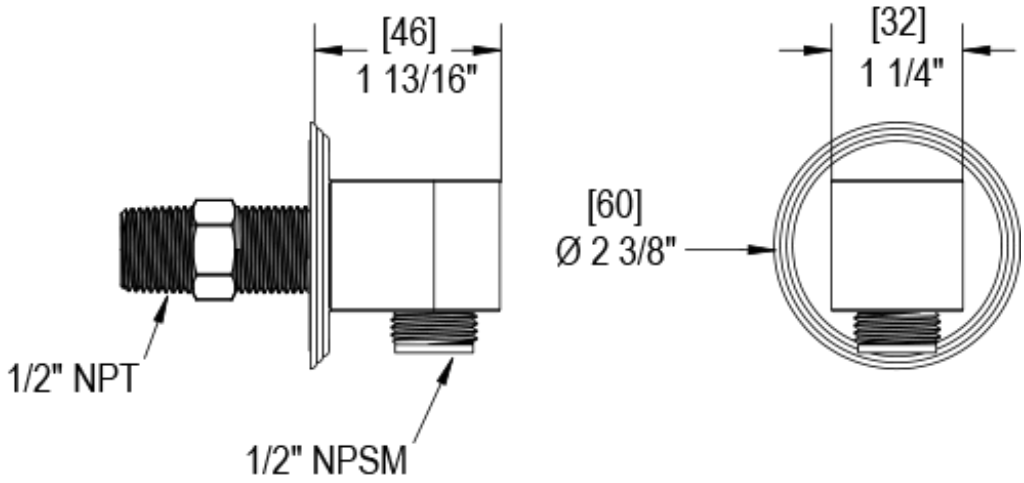

Tel: 905-851-6780
Fax: 905-851-8031
Toll Free: 800-461-5901

2TJSWCHCH

Specifications

WALL MOUNT TUB SPOUT. 1/2" SLIP FIT

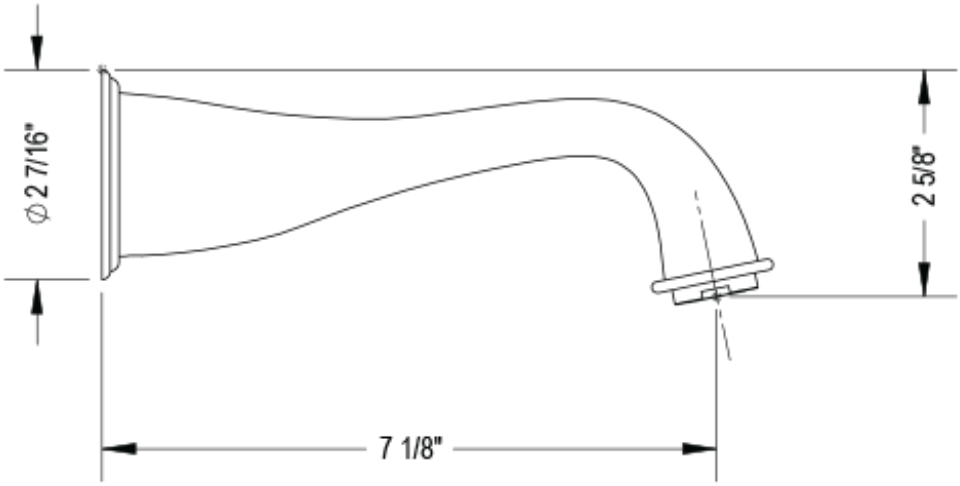

Tel: 905-851-6780
Fax: 905-851-8031
Toll Free: 800-461-5901

4F032CHCH

Specifications

3 FUNCTION SHOWER HEAD WITH 8" SHOWER ARM & FLANGE

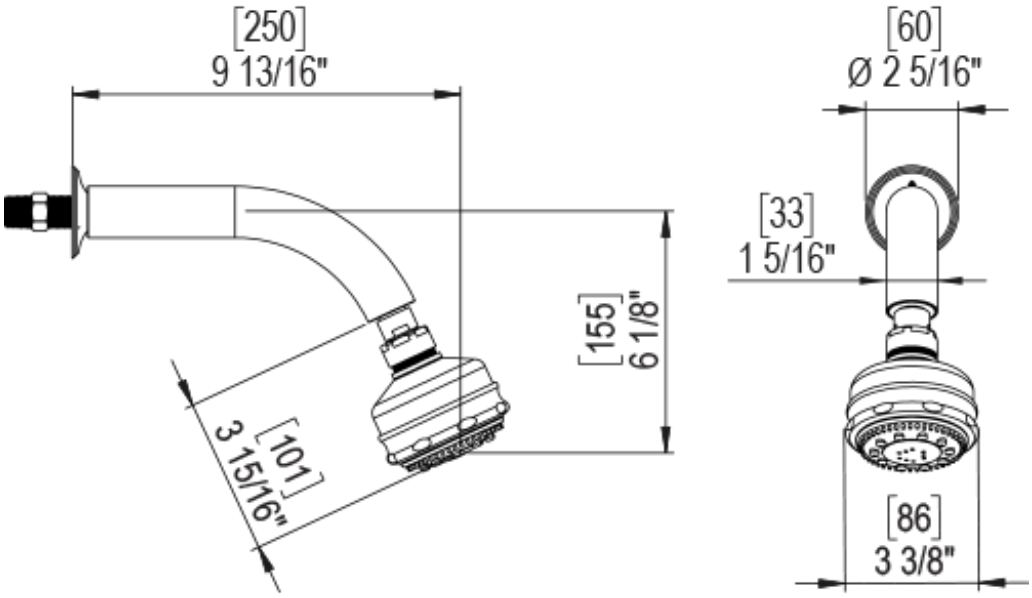

Tel: 905-851-6780
Fax: 905-851-8031
Toll Free: 800-461-5901