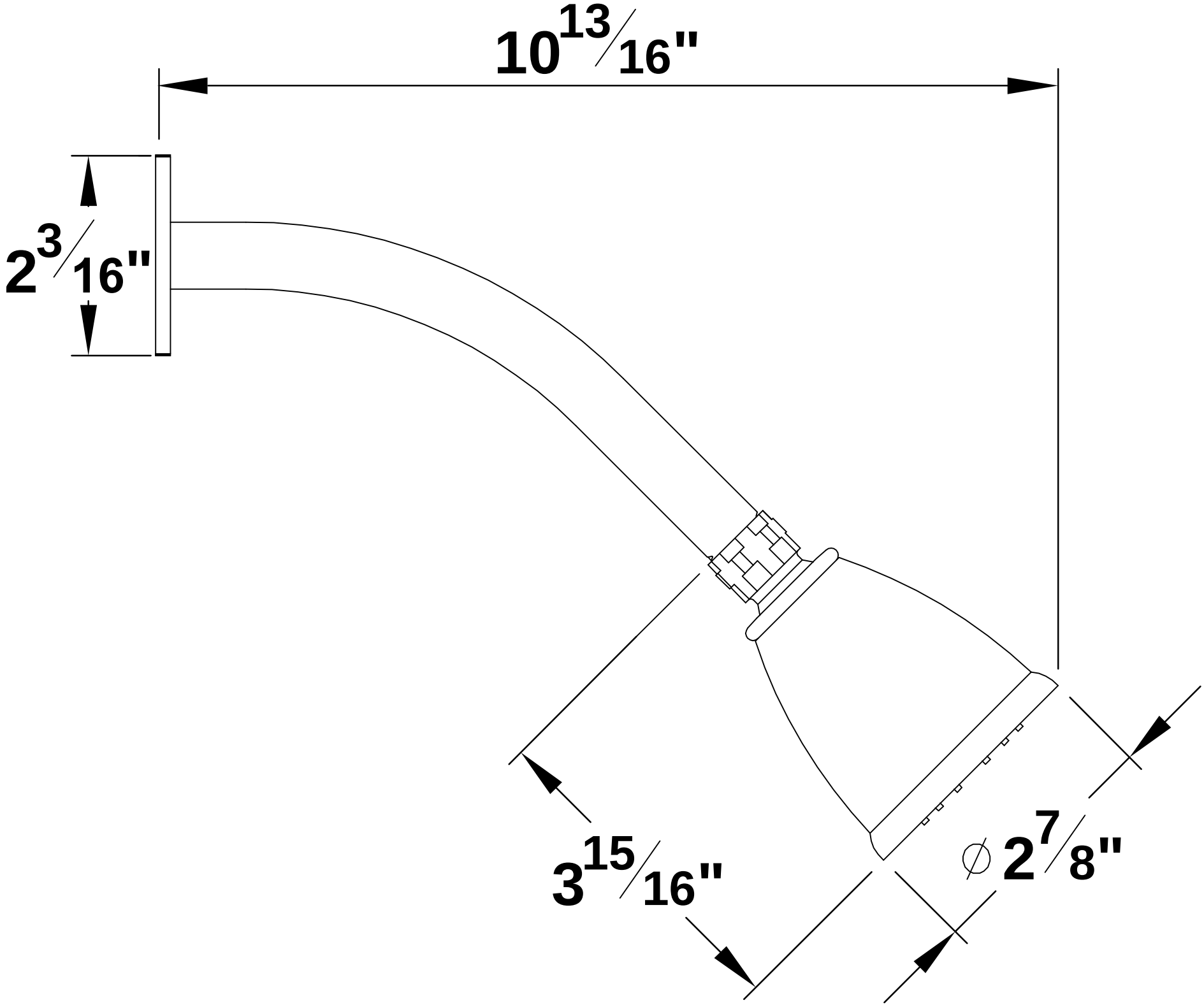
10 13/16"
2 3/16"
3 15/16"
∅ 2 7/8"