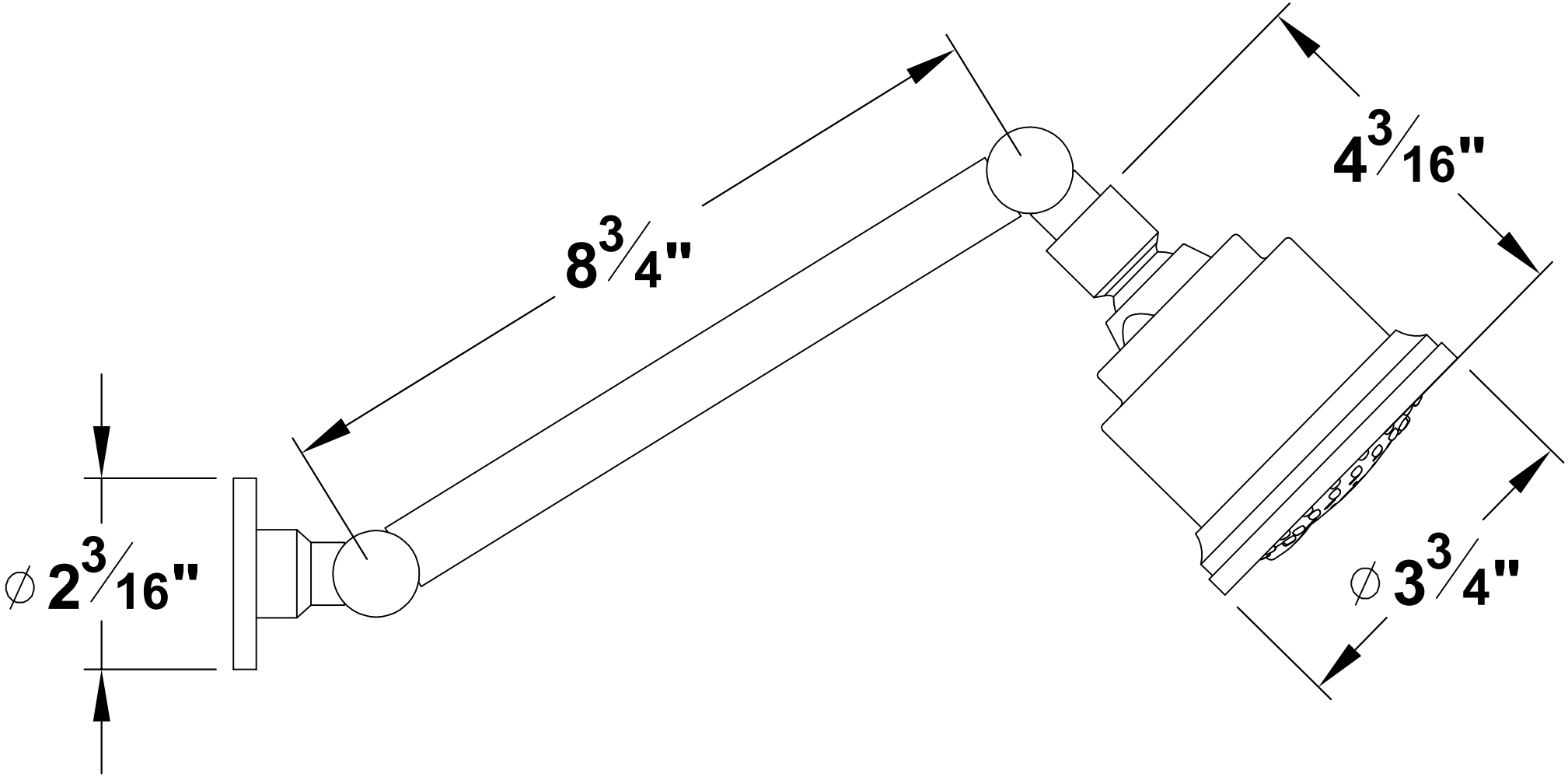
8 3/4"
4 3/16"
∅ 2 3/16"
∅ 3 3/4"