DREAMLINE®
dream in style

MODEL INFORMATION

B3DS3636XXC0001

DREAMSTONE SHOWER BASE

NEO-ANGLE

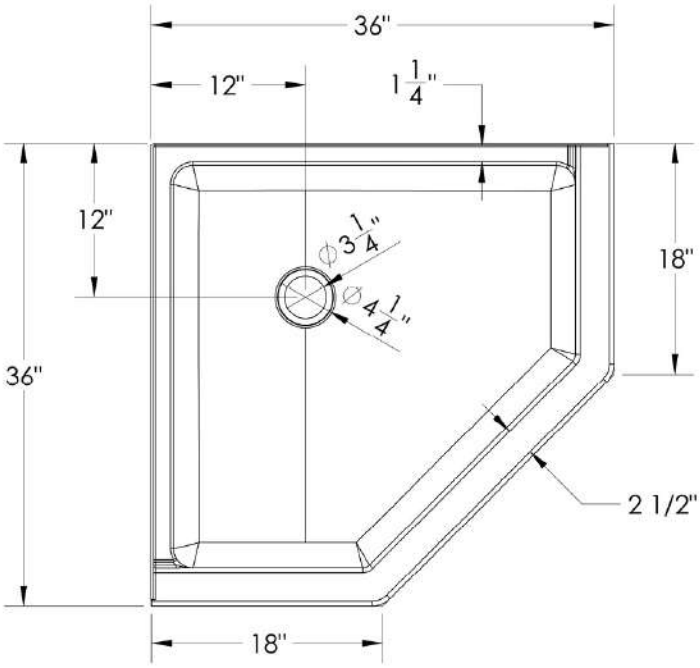

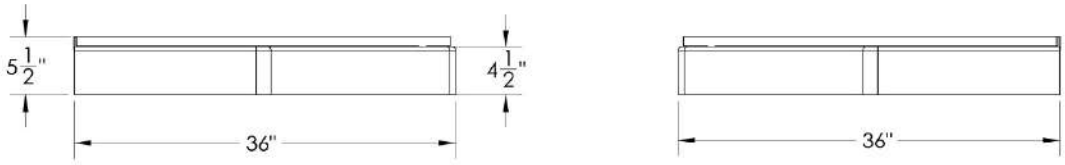

DreamLine reserves the right to update or modify the hardware or materials pictured without prior notice for the purpose of product improvement and customer satisfaction.

© 2021 DreamLine. All rights reserved.