PHYLRICH®

Defining Luxury Since 1959

Hex Traditional Exposed Tub and Hand Shower Set

K2393-23

TECHNICAL DETAILS

ADA Compliance: Yes
Fitting Hole Diameter: 1 1/8"
Number of Holes: Two Hole
Number of Handles: Two
Handle Turn Angle: Quarter Turn
Spout Reach: 3 1/2"
Installation Type: Wall Mounted
Primary Material: Brass
Valve Material: Ceramic
Spout Flow Restriction: Full Flow
Hand Shower Flow Restriction: 1.8 GPM
Water Pressure Maximum: 85 PSI
Water Pressure Minimum: 20 PSI
Water Pressure Recommended: 60 PSI

PRODUCT FEATURES

- Collection: Hex Traditional
- Temperature Controlled By Handles
- Lever Handle
- Hand Shower Hose Length: 59"

CODES & STANDARDS

ASME A112.181/ CSA B1251, ASME 112.18.2/ CSA B125.2, ANSI NSF, CEC

WARRANTY

Mechanical Warranty: 10 Years from date of purchase.
finish warranty: see catalog for further information.

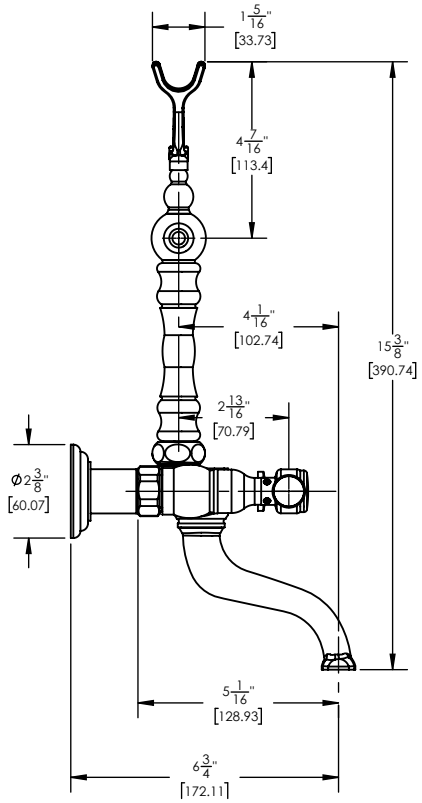

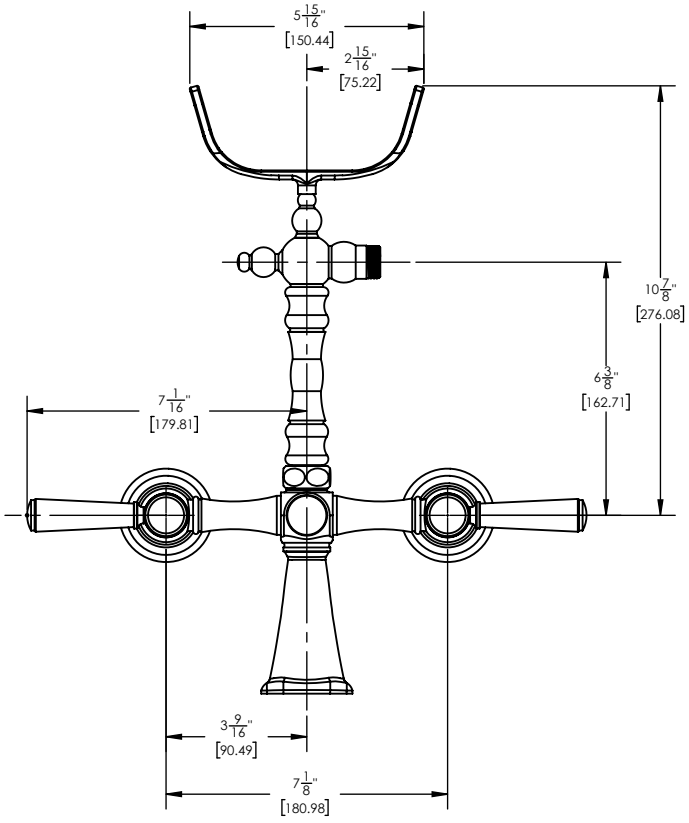

1261 Logan Avenue, Costa Mesa, California 92626. Phone: 714.361.4800 Fax: 714.617.3120
customer.service@phylrich.com

PHYLRICH®

Defining Luxury Since 1959

Hex Traditional Exposed Tub and Hand Shower Set

K2393-24

TECHNICAL DETAILS

ADA Compliance: Yes
Fitting Hole Diameter: 1 1/8"
Number of Holes: Two Hole
Number of Handles: Two
Handle Turn Angle: Quarter Turn
Spout Reach: 3 1/2"
Installation Type: Wall Mounted
Primary Material: Brass
Valve Material: Ceramic
Spout Flow Restriction: Full Flow
Hand Shower Flow Restriction: 1.8 GPM
Water Pressure Maximum: 85 PSI
Water Pressure Minimum: 20 PSI
Water Pressure Recommended: 60 PSI

PRODUCT FEATURES

- Collection: Hex Traditional
- Temperature Controlled By Handles
- Cross Handle
- Hand Shower Hose Length: 59"

CODES & STANDARDS

ASME A112.181/ CSA B1251, ASME 112.18.2/ CSA B125.2, ANSI NSF, CEC

WARRANTY
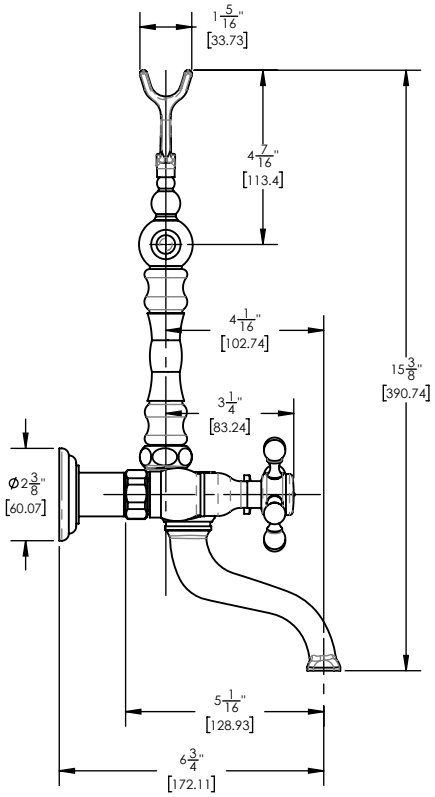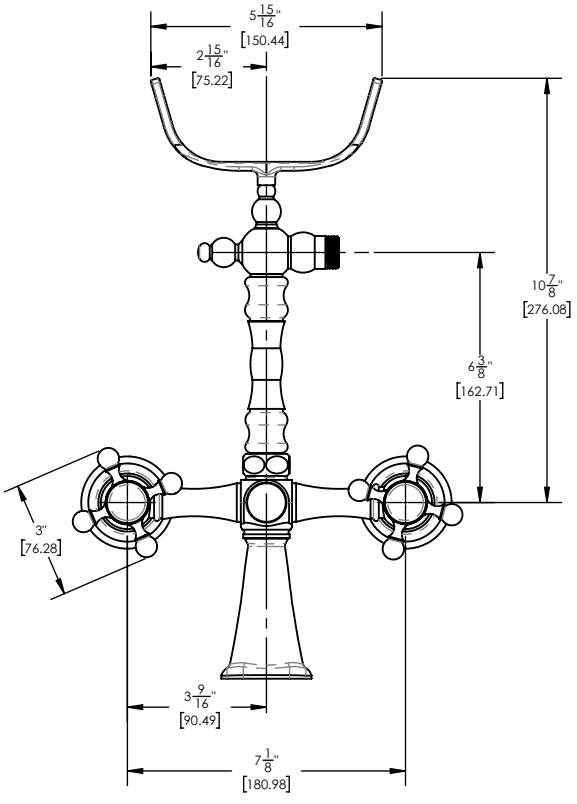
Mechanical Warranty: 10 Years from date of purchase.
finish warranty: see catalog for further information.