DECK MOUNT TUB & SHOWER WITH HAND HELD SHOWER

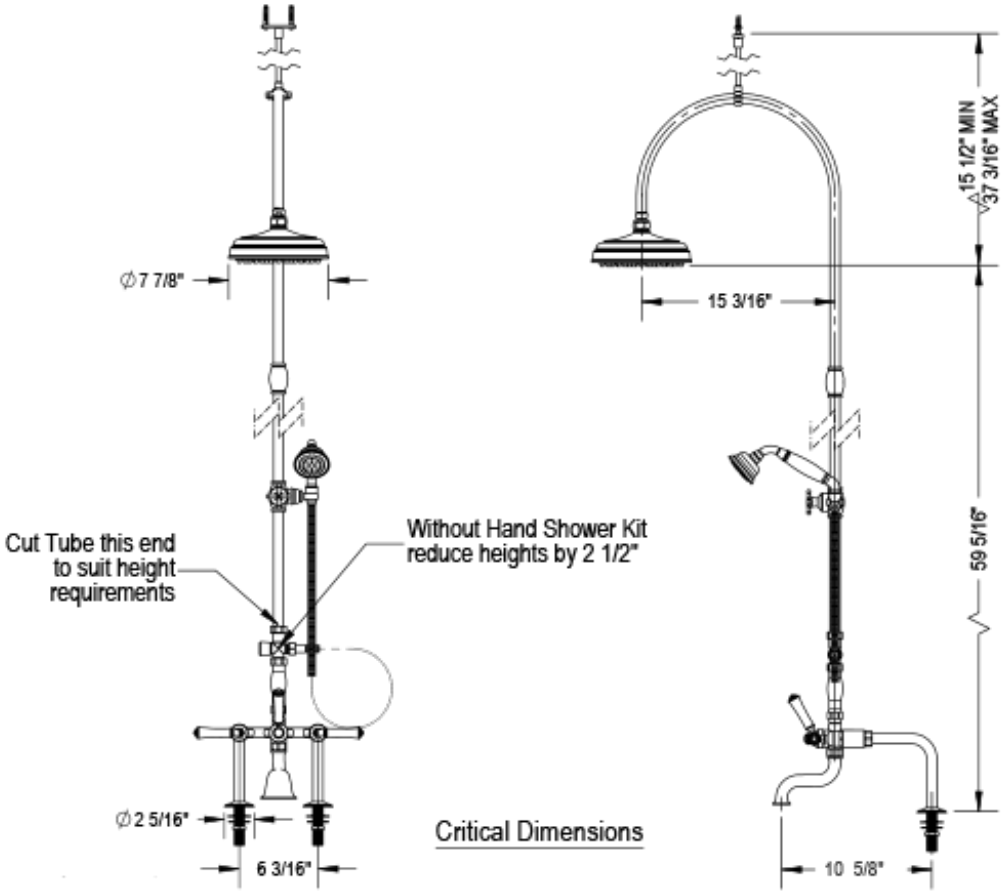

Critical Dimensions