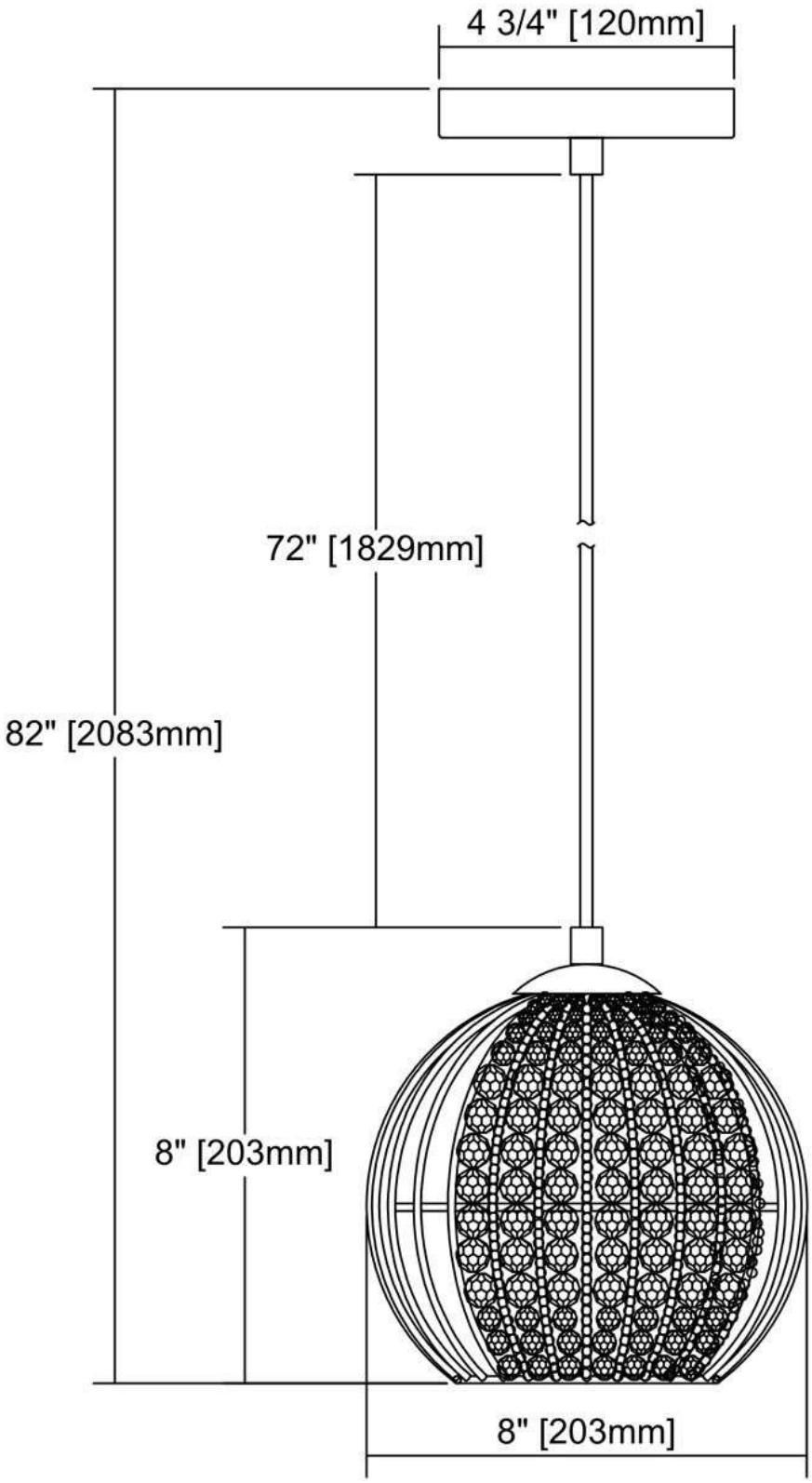
4 3/4" [120mm]
72" [1829mm]
82" [2083mm]
8" [203mm]
8" [203mm]