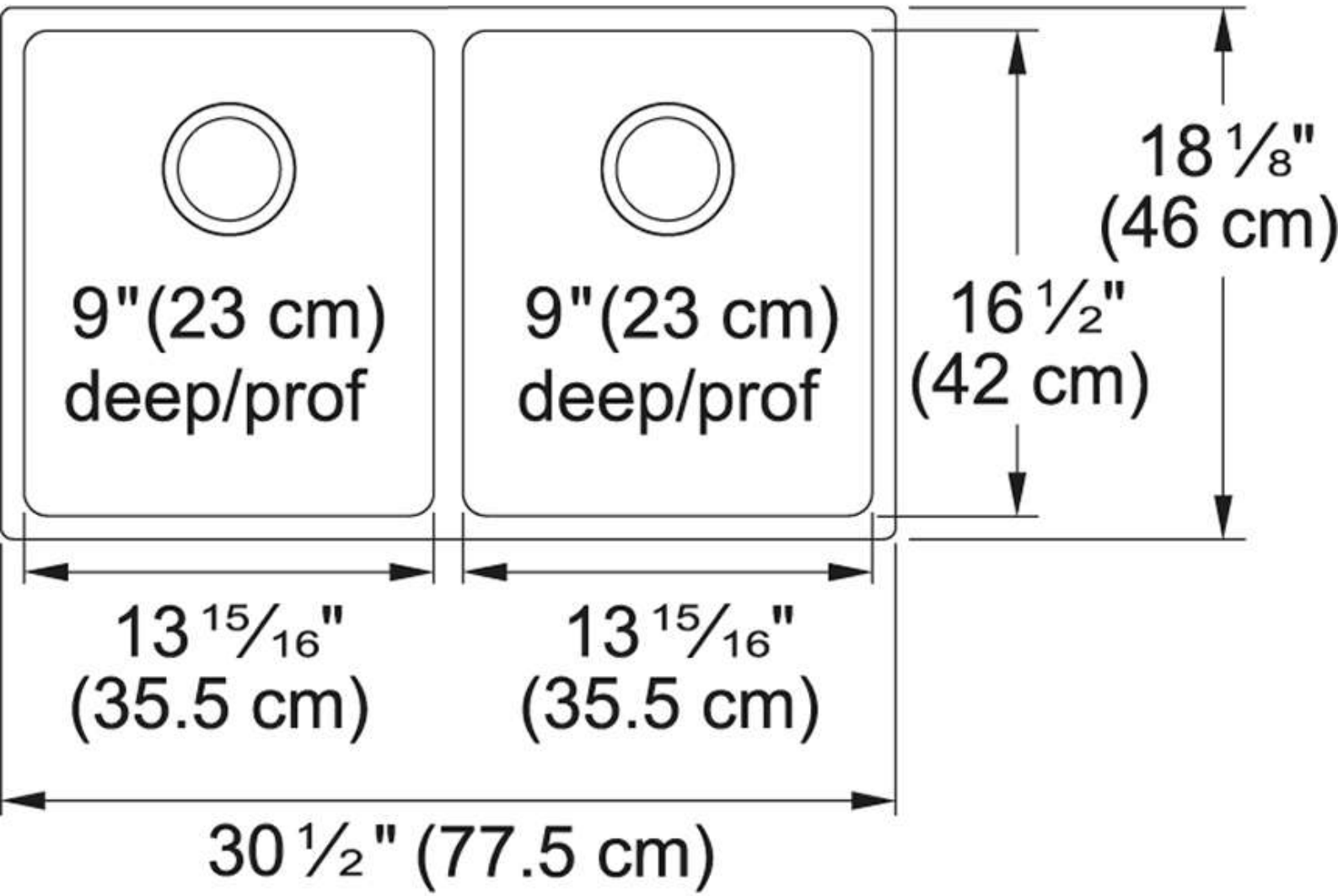
9"(23 cm)
deep/prof
9"(23 cm)
deep/prof
18 1/8"
(46 cm)
16 1/2"
(42 cm)
13 15/16"
(35.5 cm)
13 15/16"
(35.5 cm)
30 1/2" (77.5 cm)