California Faucets®

Alisomar®

CONTEMPORARY SINGLE HOLE FLOOR MOUNT TUB FILLER WITH HANDSHOWER

Features

- *Available in 28 finishes including 13 PVD finishes*
- *All brass construction*
- *No additional wall or trap stabilizer kit required*
- *Tub filler: Maximum flow rate: 10 gpm (37 L/min) at 60 psi*
- *Handshower: Flow rate: 2.0 gpm (7.6 L/min) or 1.8 gpm (6.8 L/min)*
- *Ceramic mixing cartridge*
- *Handshower holder may be adjusted forward during installation*
- *Rough valve sold separately (9511)*

Codes/Standards Applicable

Product meets or exceeds the following:

- *ASME A112.18.1/CSA B125.1*
- *CEC (1.8 gpm) / DOE (2.0 & 1.8 gpm)*
- *Commonwealth of MA*
- *EPA WaterSense handshower (2.0 gpm)*
- *ADA compliant (with lever handles)*
- *Local codes may require installation of an upstream tempering valve*

1111-XX.20
1111-XX.18

1111-ST.FR shown

XX = DENOTES HANDLE SERIES

DIMENSIONS, in.[mm]		
HANDLE OPTIONS	A	B
45	3" [76]	$6\frac{1}{4}$" [159]
62	$3\frac{9}{16}$" [91]	$5\frac{5}{16}$" [135]
65	$1\frac{3}{8}$" [36]	$5\frac{13}{16}$" [147]
66	$2\frac{5}{8}$" [66]	$6\frac{3}{8}$" [162]
70	$2\frac{3}{4}$" [70]	6" [152]
74	3" [76]	$6\frac{11}{16}$" [170]
E3	$3\frac{15}{16}$" [101]	$5\frac{11}{16}$" [144]
E5	$3\frac{15}{16}$" [100]	$5\frac{5}{16}$" [134]

THROUGH-HOLE SPECIFICATIONS	MIN	RECOMMENDED	MAX
MOUNTING FLANGE:	∅3-11/16" [94]	∅3-11/16" [94]	∅3-15/16" [100]

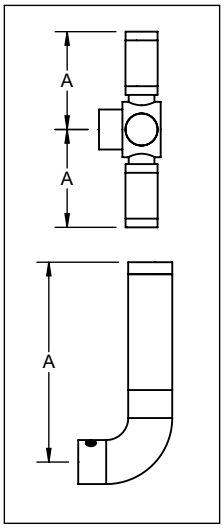

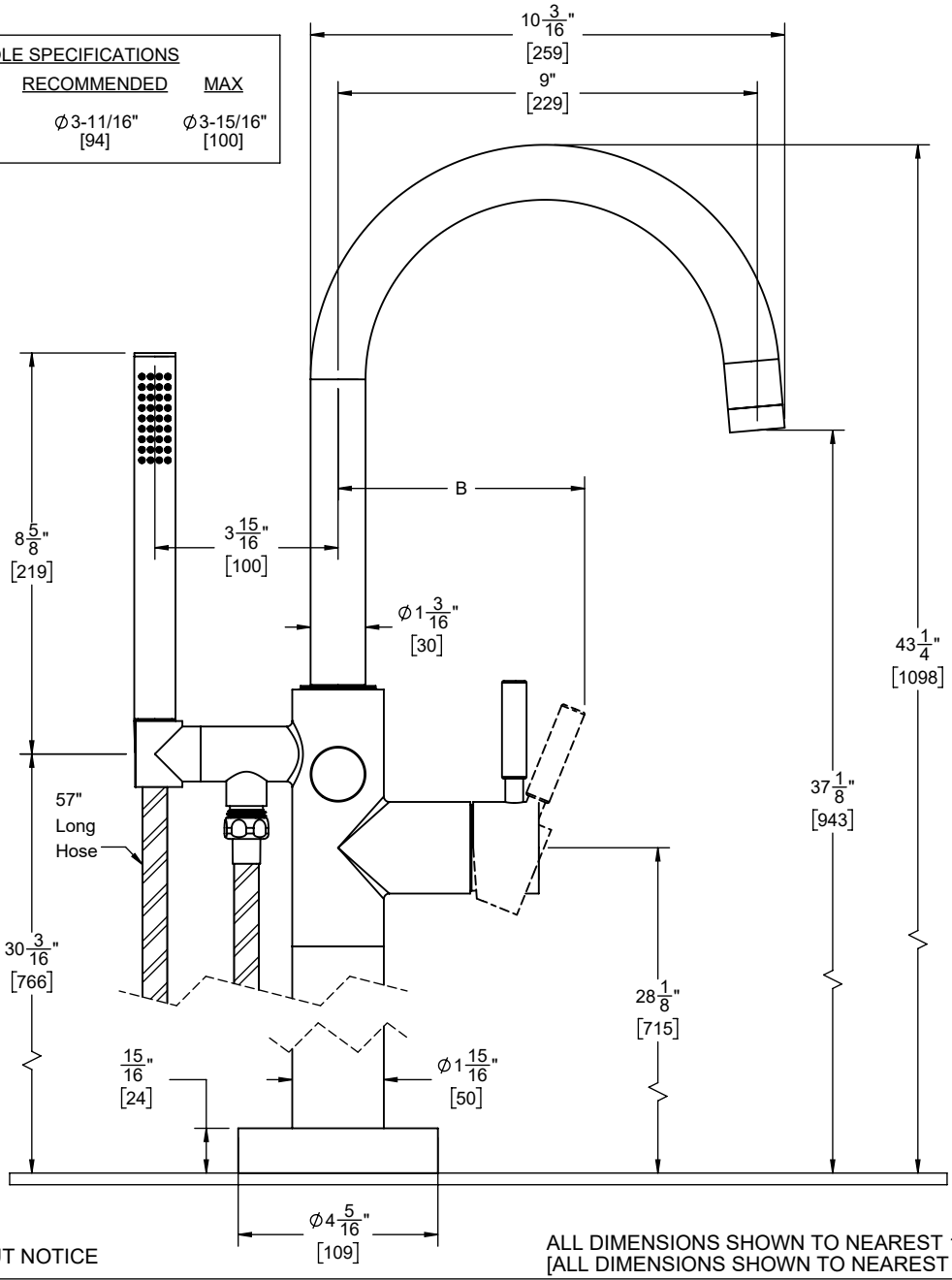

SPECIFICATIONS SUBJECT TO CHANGE WITHOUT NOTICE

ALL DIMENSIONS SHOWN TO NEAREST 1/16"
[ALL DIMENSIONS SHOWN TO NEAREST 1MM]