21ICQCHCH
Specifications

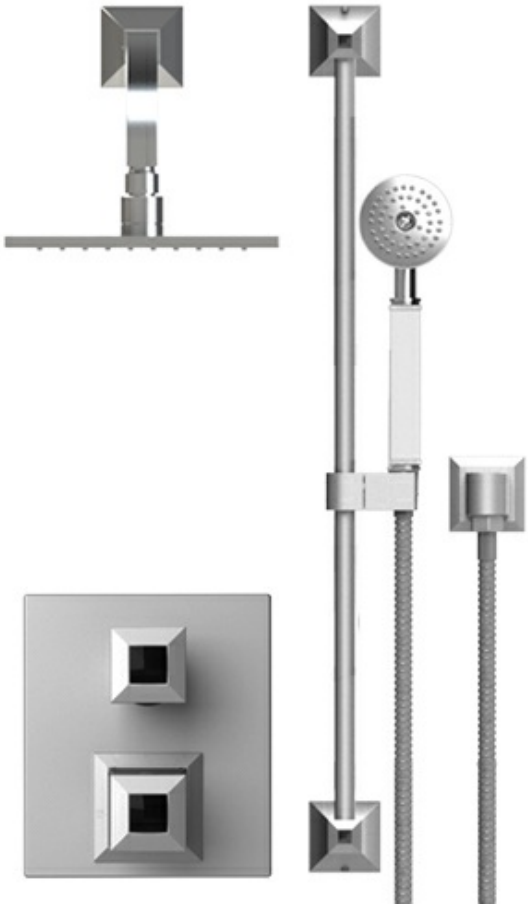

Tel: 905-851-6780
Fax: 905-851-8031
Toll Free: 800-461-5901

no image

TEMPERATURE CONTROL VALVE WITH STOPS & TWO WAY DIVERTER WITH SHUT-OFF TRIM ONLY

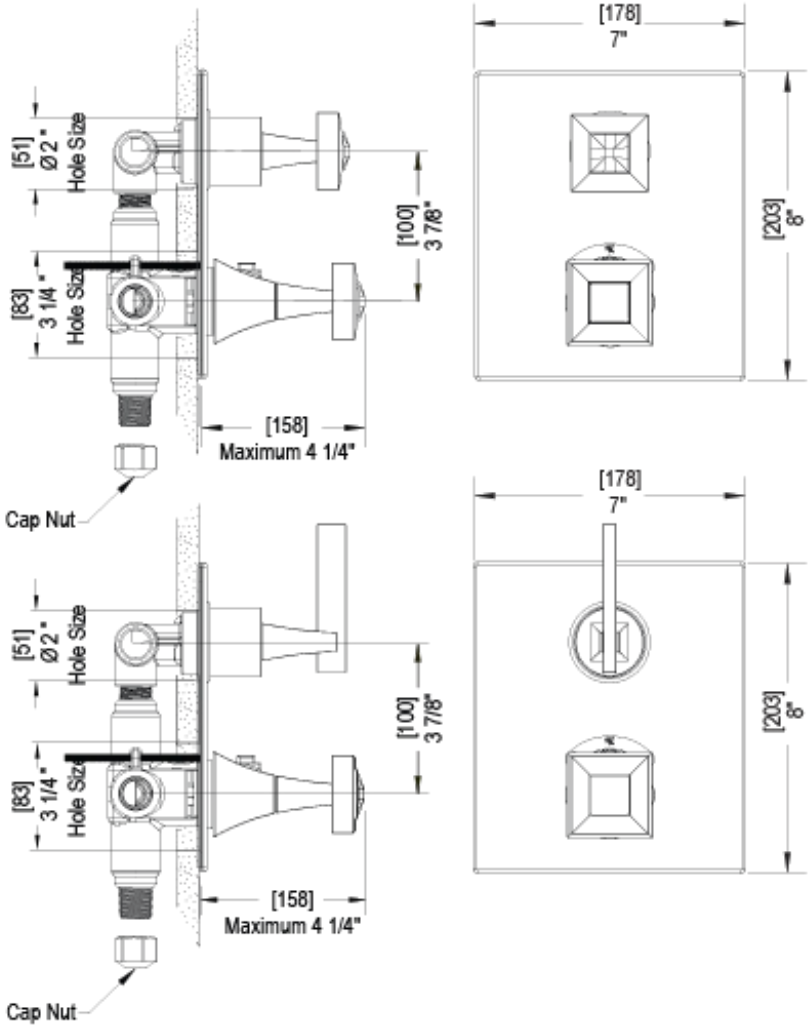

Specifications

ADJUSTABLE SLIDE BAR WITH HAND HELD SHOWER ASSEMBLY

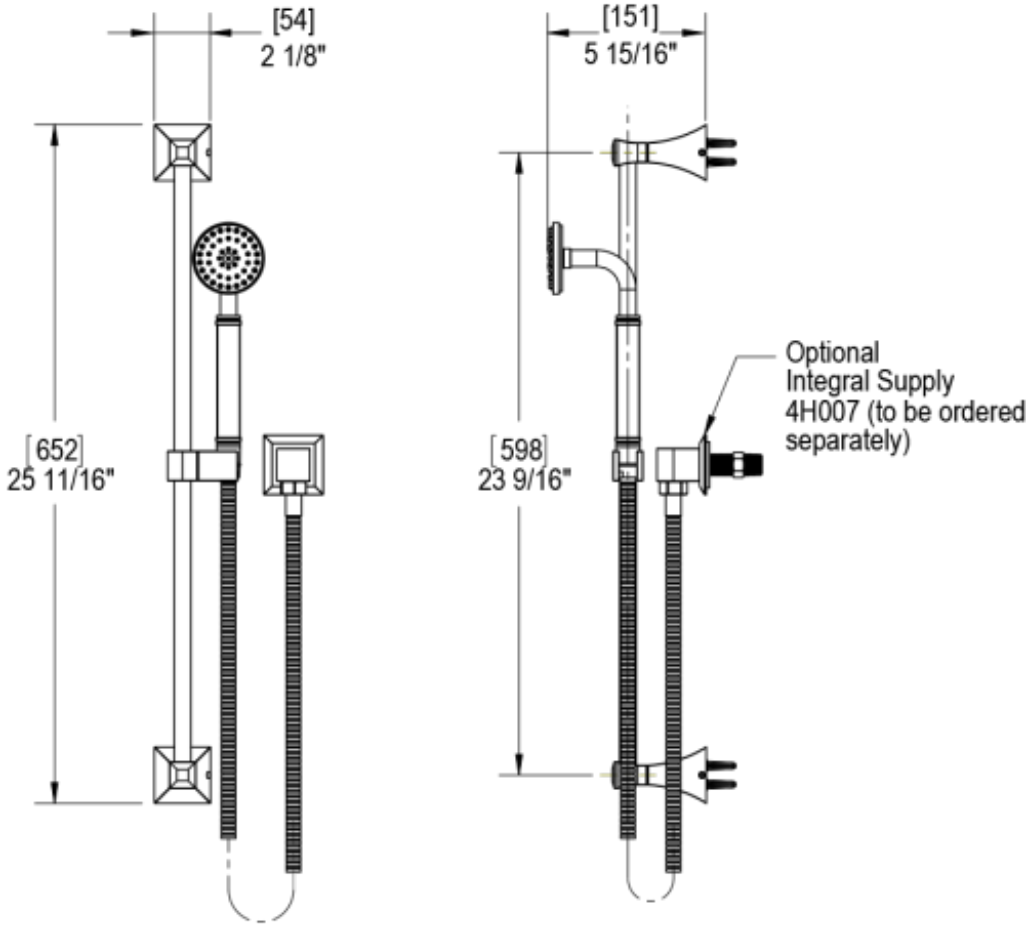

Tel: 905-851-6780
Fax: 905-851-8031
Toll Free: 800-461-5901

4F015CHCH

Specifications

8" SHOWER HEAD WITH WALL MOUNT 12" SHOWER ARM & FLANGE

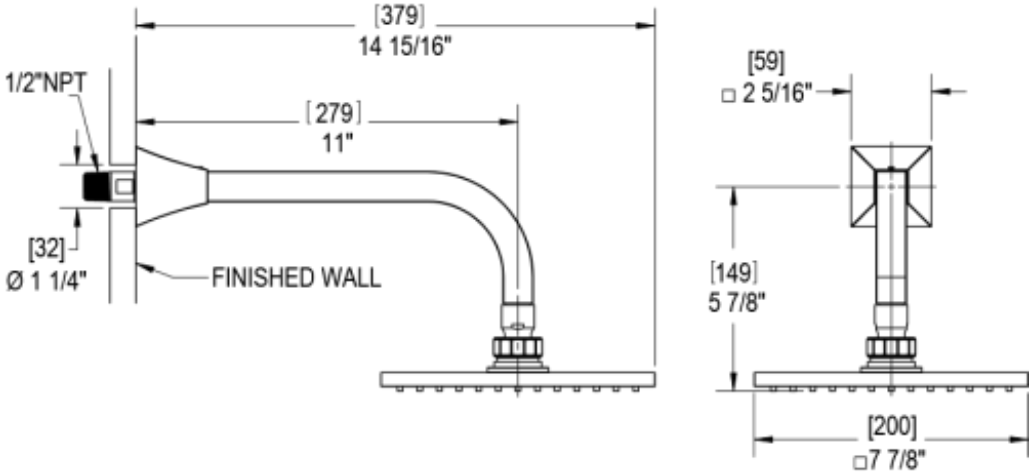

Tel: 905-851-6780
Fax: 905-851-8031
Toll Free: 800-461-5901

4H007CH

Specifications

INTEGRAL SUPPLY WITH 1/2" NPT X 1/2" NPSM X 3" NIPPLE

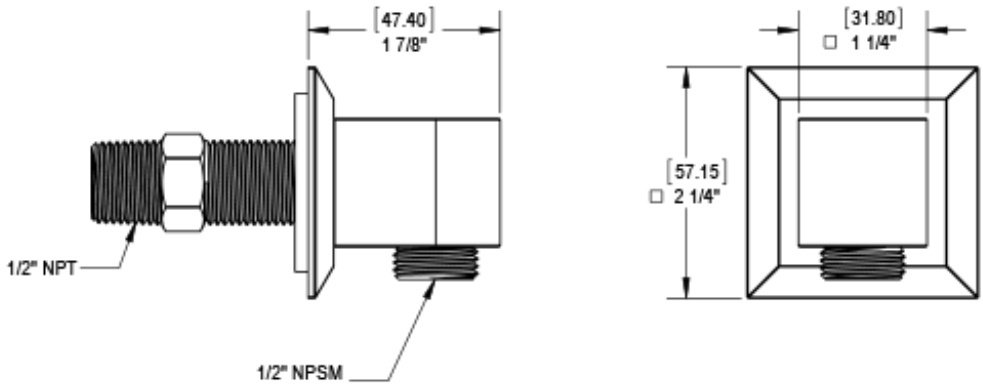

Tel: 905-851-6780
Fax: 905-851-8031
Toll Free: 800-461-5901