K 48-04

Drawing below are shown with a Standard Daytona Aluminum Base-Frame.

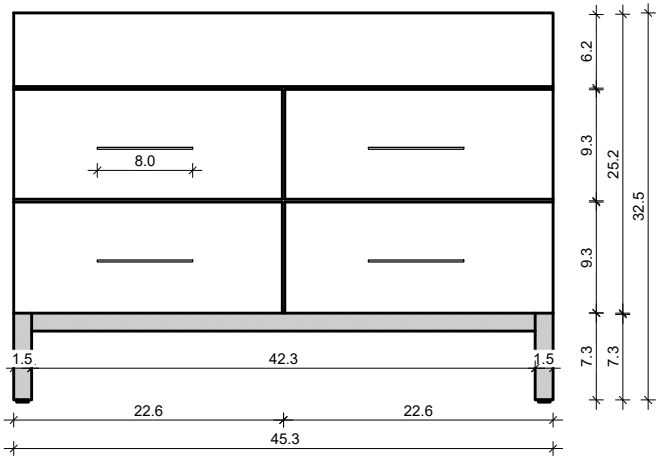

FRONT VIEW

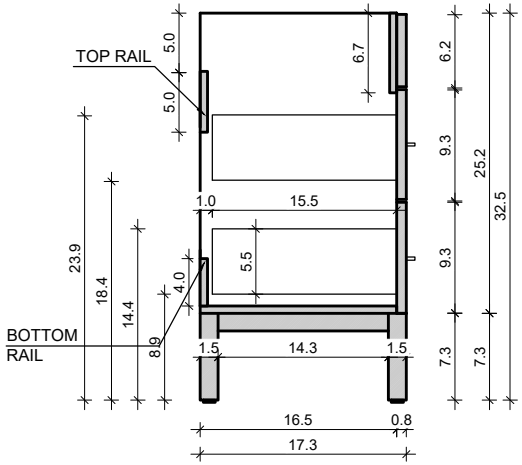

SIDE VIEW

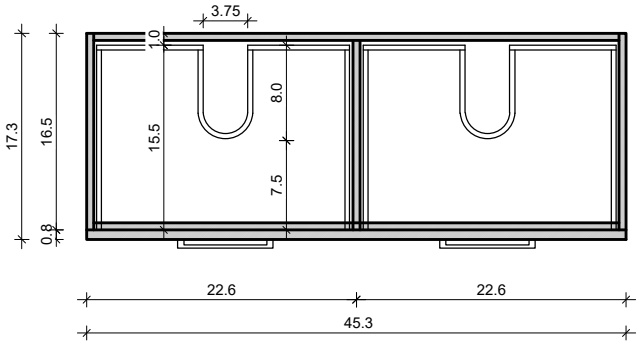

TOP VIEW

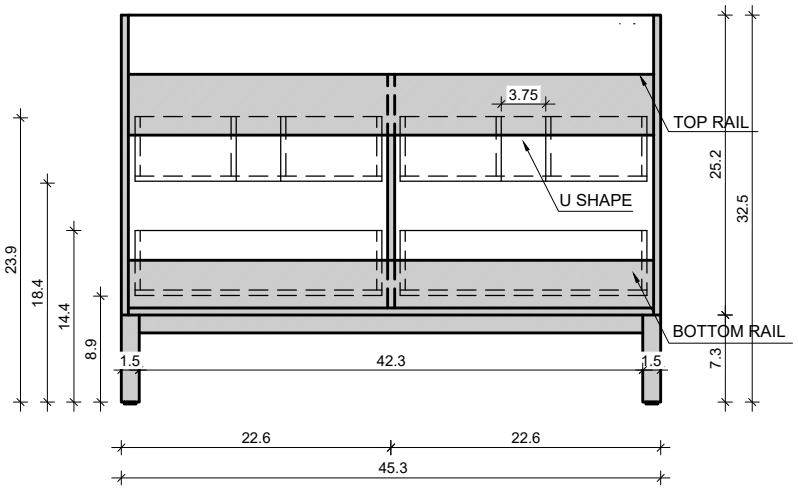

BACK VIEW

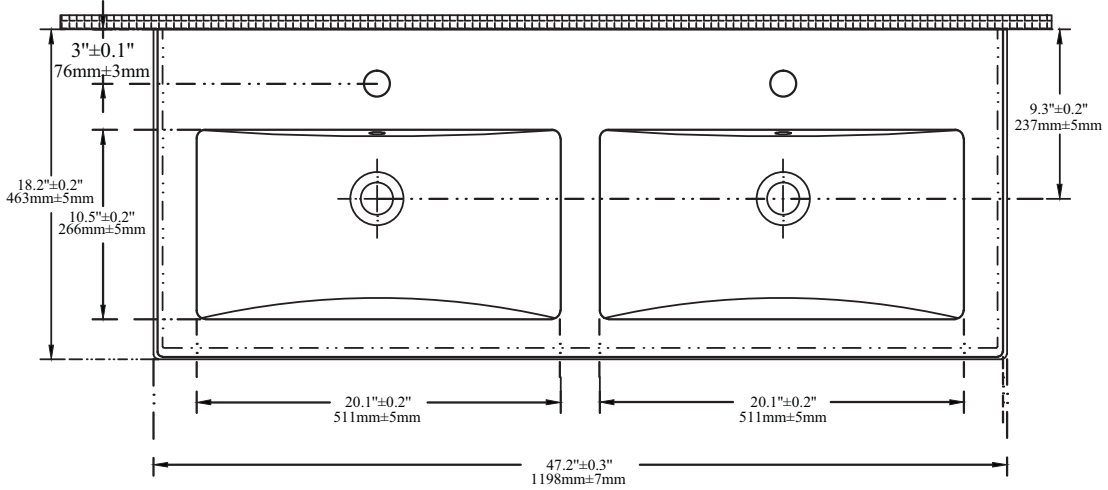
3"±0.1"
76mm±3mm
9.3"±0.2"
237mm±5mm
18.2"±0.2"
463mm±5mm
10.5"±0.2"
266mm±5mm
20.1"±0.2"
511mm±5mm
20.1"±0.2"
511mm±5mm
47.2"±0.3"
1198mm±7mm

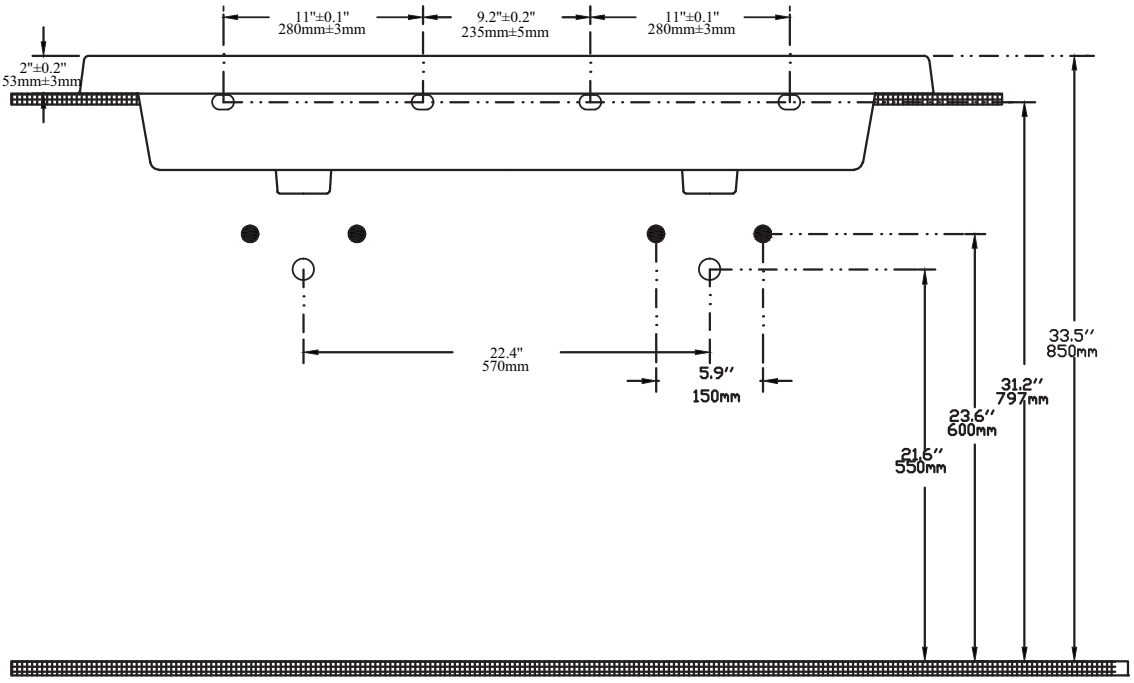
11"±0.1"
280mm±3mm
9.2"±0.2"
235mm±5mm
11"±0.1"
280mm±3mm
2"±0.2"
53mm±3mm
22.4"
570mm
5.9"
150mm
33.5"
850mm
31.2"
797mm
23.6"
600mm
21.6"
550mm

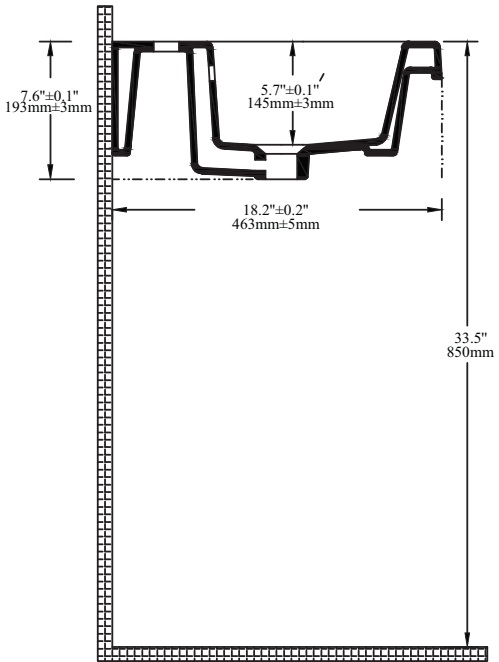
7.6"±0.1"
193mm±3mm
5.7"±0.1"
145mm±3mm
18.2"±0.2"
463mm±5mm
33.5"
850mm