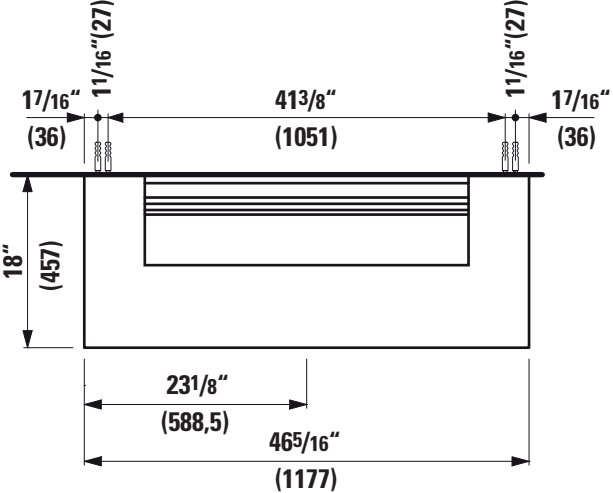
11/16"(27)
11/16"(27)
17/16"
(36)
41 3/8"
(1051)
17/16"
(36)
18"
(457)
23 1/8"
(588,5)
46 5/16"
(1177)

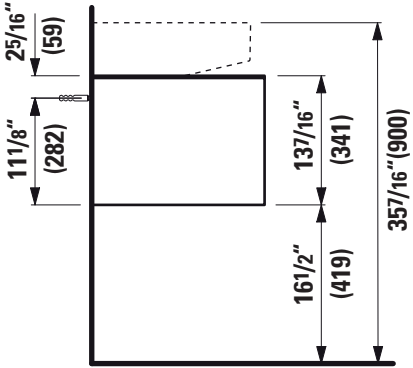
25/16"
(59)
11 1/8"
(282)
13 7/16"
(341)
16 1/2"
(419)
35 7/16"(900)