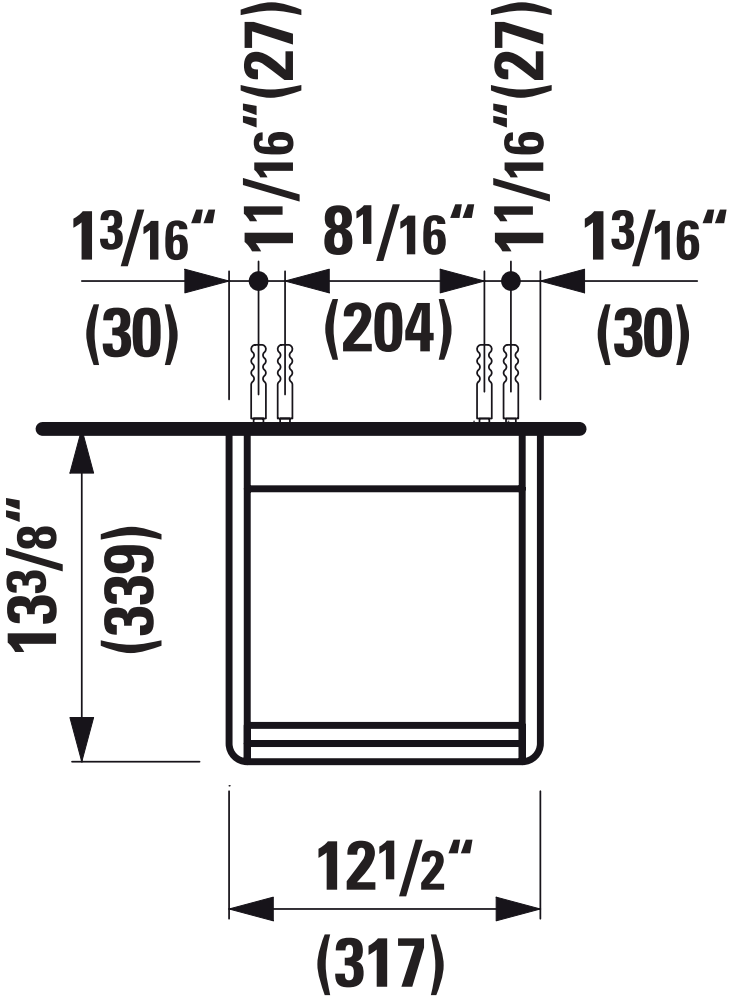
1 3/16"
(30)
1 1/16" (27)
8 1/16"
(204)
1 1/16" (27)
1 3/16"
(30)
13 3/8"
(339)
12 1/2"
(317)

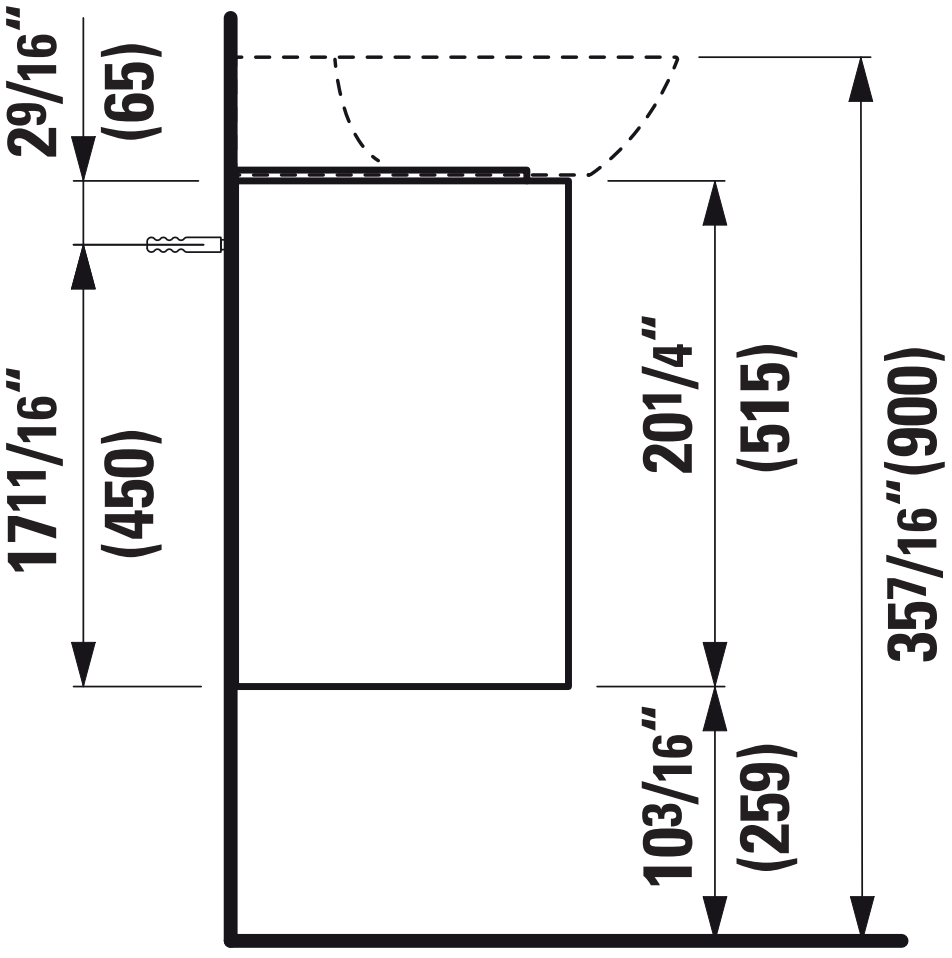
2 9/16"
(65)
17 11/16"
(450)
20 1/4"
(515)
35 7/16" (900)
10 3/16"
(259)