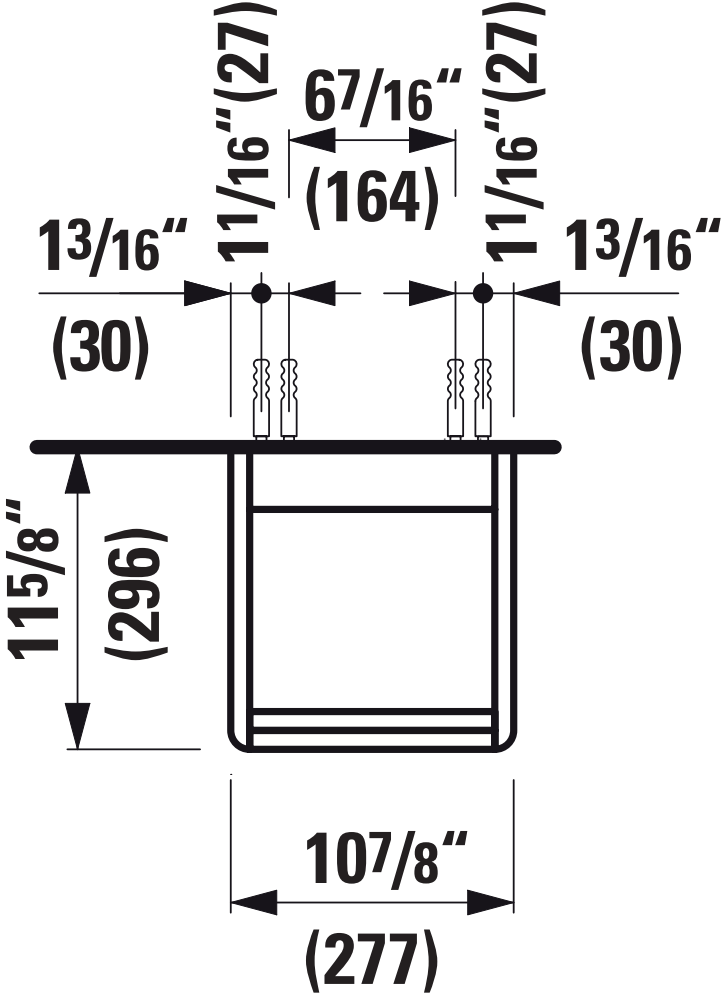
11/16"(27)
6 7/16"
(164)
11/16"(27)
1 3/16"
(30)
1 3/16"
(30)
11 5/8"
(296)
10 7/8"
(277)

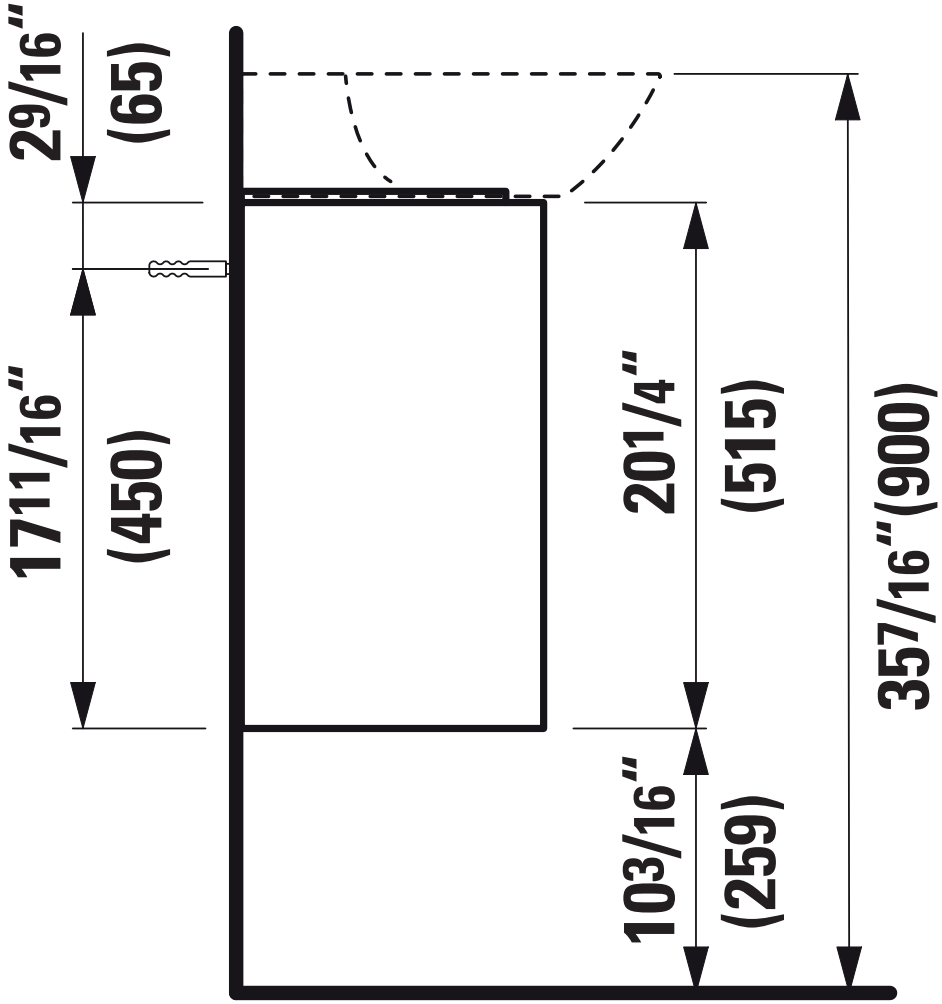
2 9/16"
(65)
17 11/16"
(450)
20 1/4"
(515)
35 7/16"(900)
10 3/16"
(259)