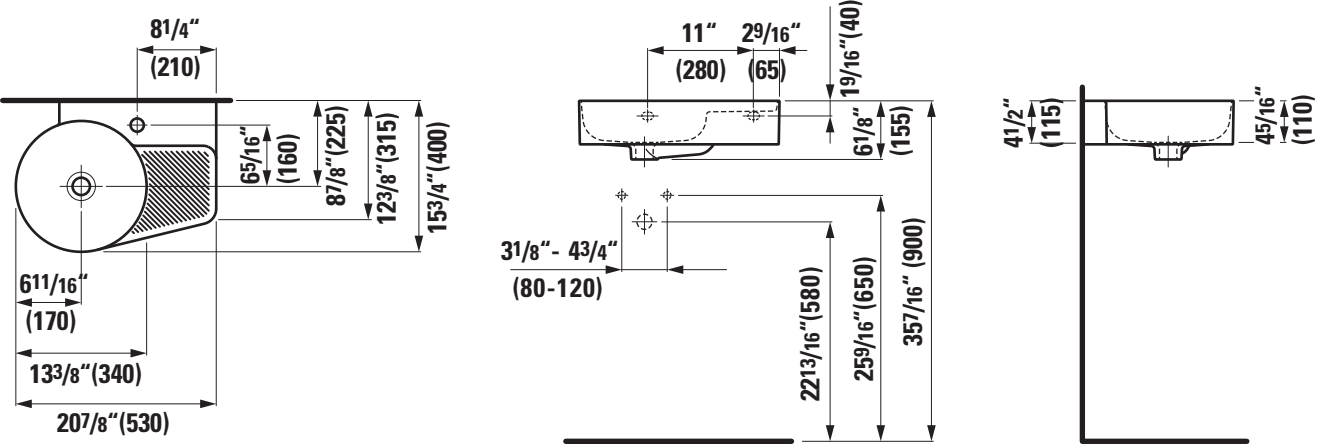
8 1/4"
(210)
6 5/16"
(160)
8 7/8"(225)
12 3/8"(315)
15 3/4"(400)
6 11/16"
(170)
13 3/8"(340)
20 7/8"(530)
11"
2 9/16"
(280)
(65)
1 9/16"(40)
6 1/8"
(155)
3 1/8"- 4 3/4"
(80-120)
22 13/16"(580)
25 9/16"(650)
35 7/16" (900)
4 1/2"
(115)
4 5/16"
(110)